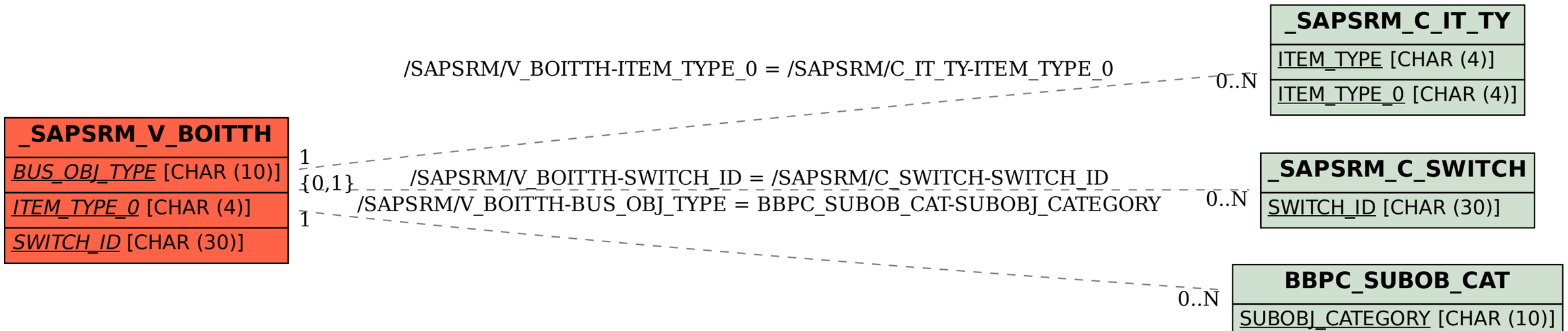SAP ABAP table /SAPSRM/V_BOITTH {Generated Table for View}