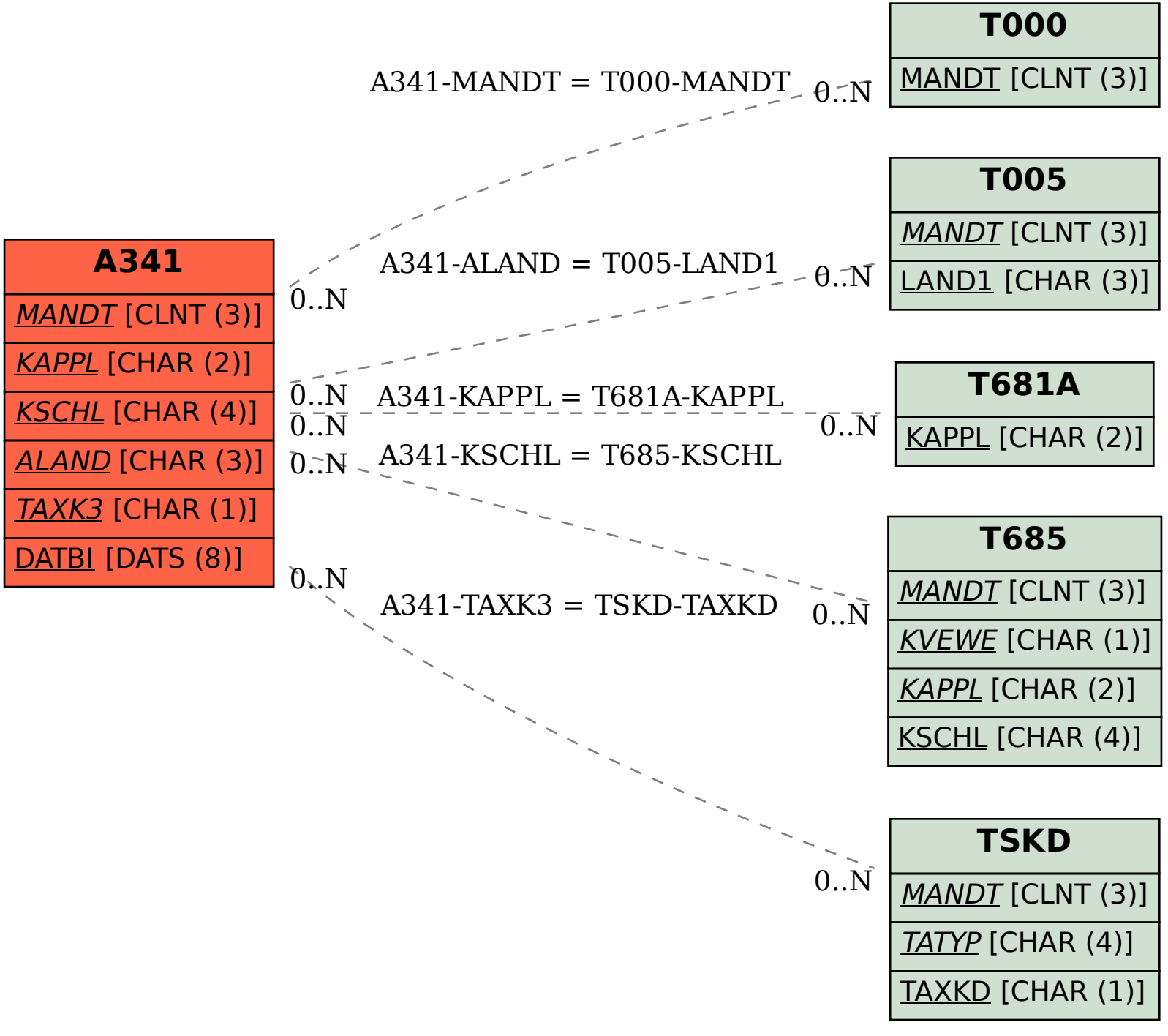SAP ABAP table A341 {Land/StKla3-Kd}