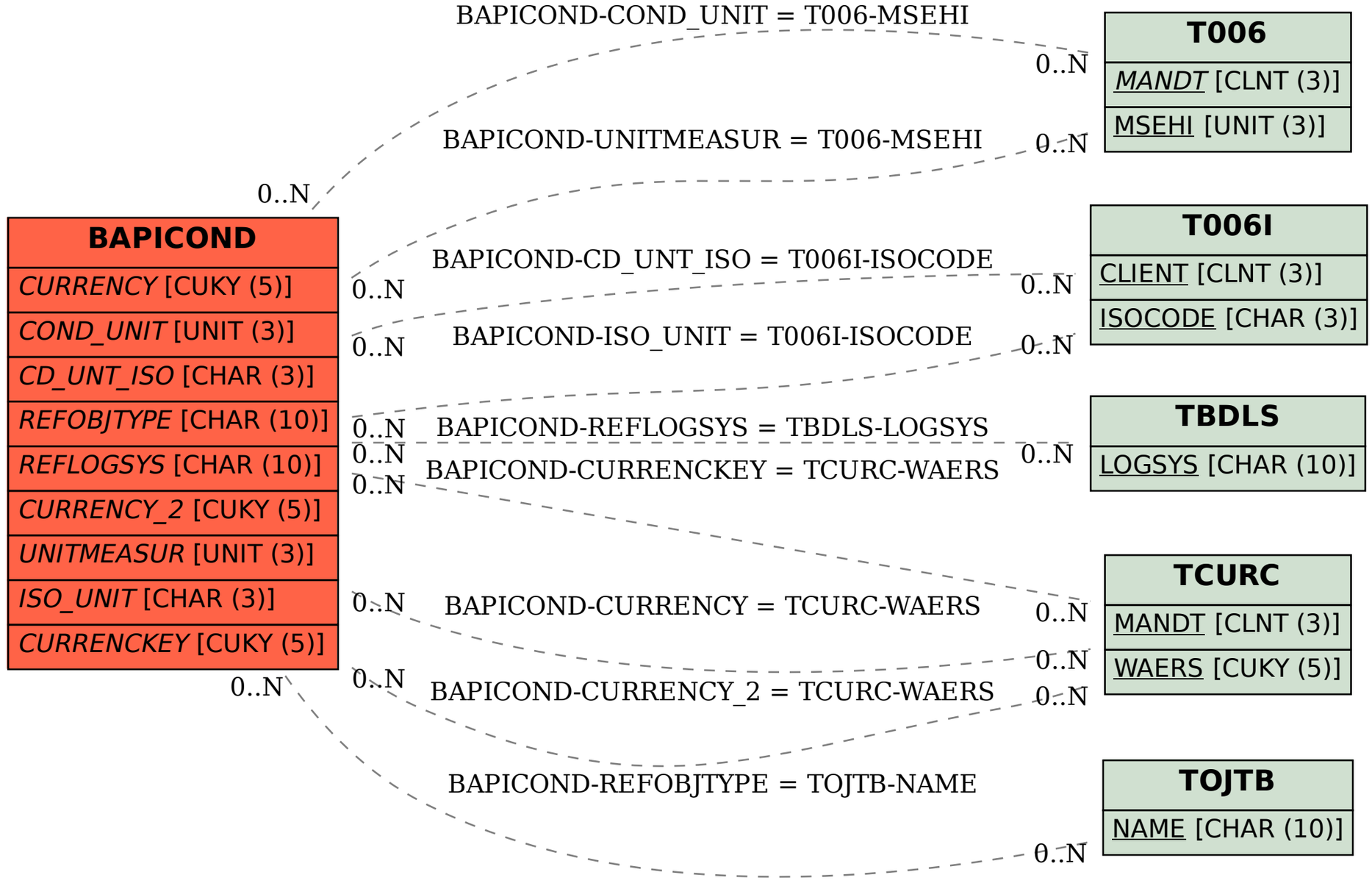SAP ABAP table BAPICOND {Communication Fields for Maintaining Conditions in the Order}