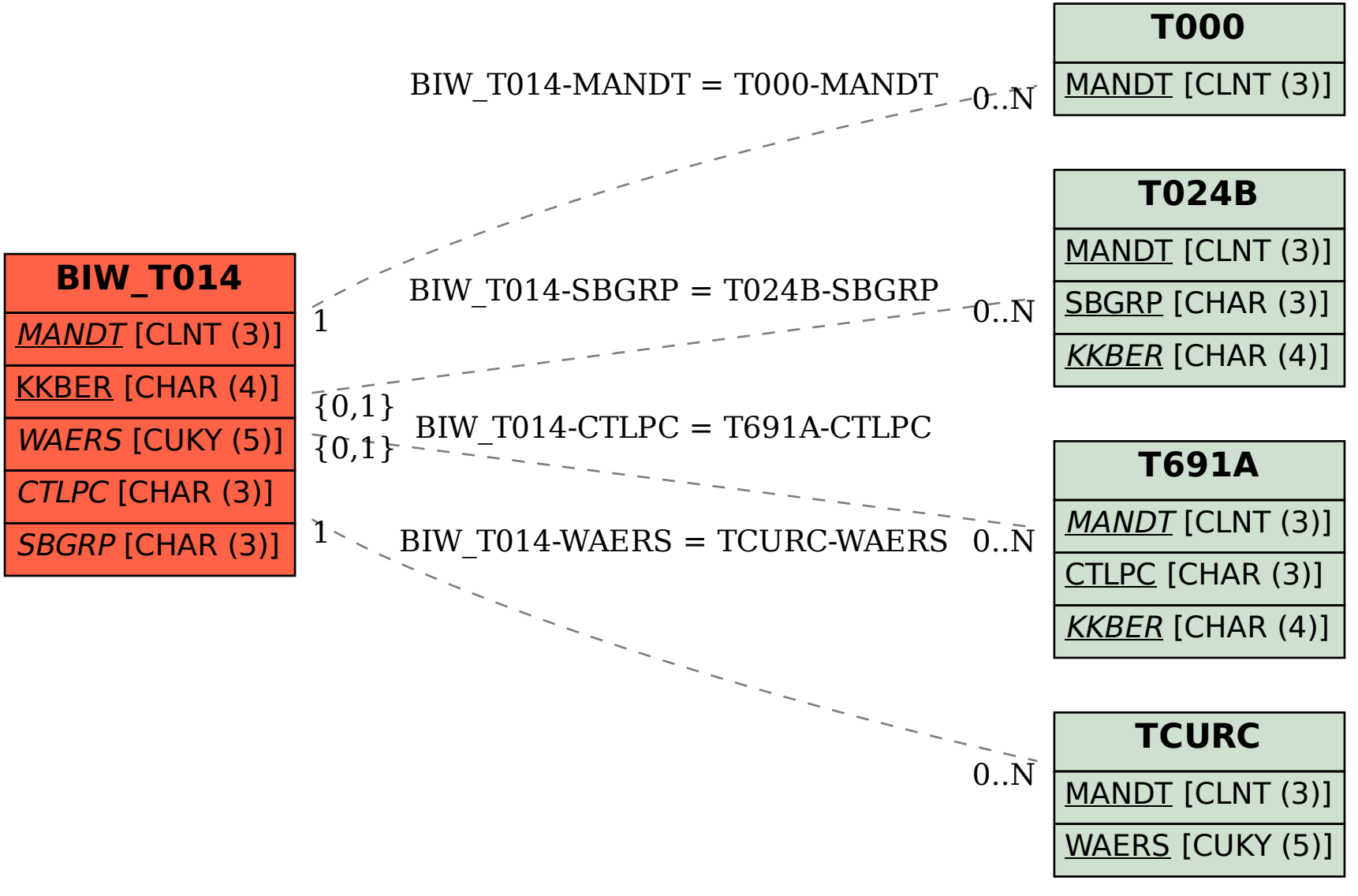SAP ABAP table BIW_T014 {Generated Table for View}