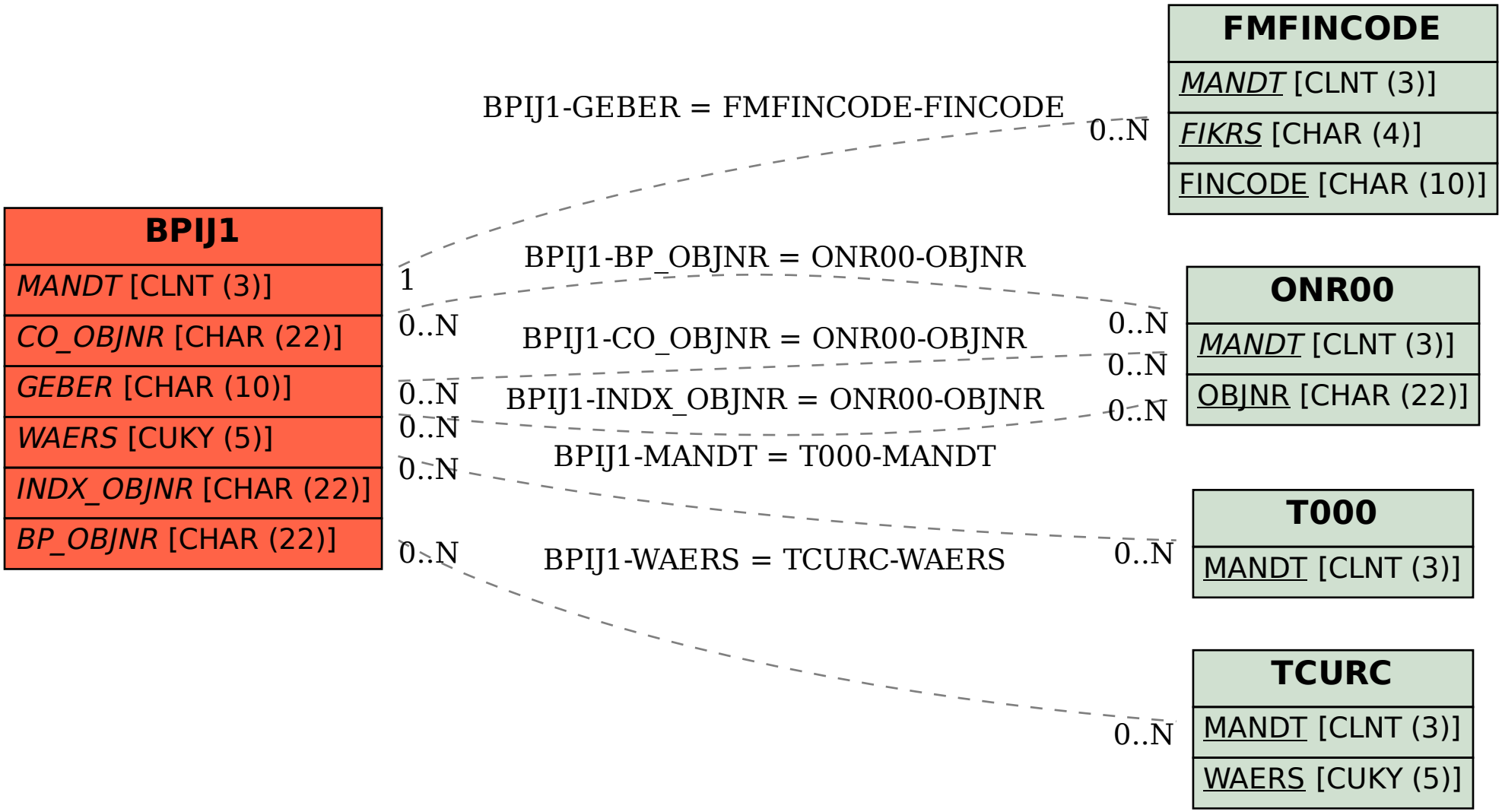SAP ABAP table BPIJ1 {Budget Object Index (Annual Budget)}