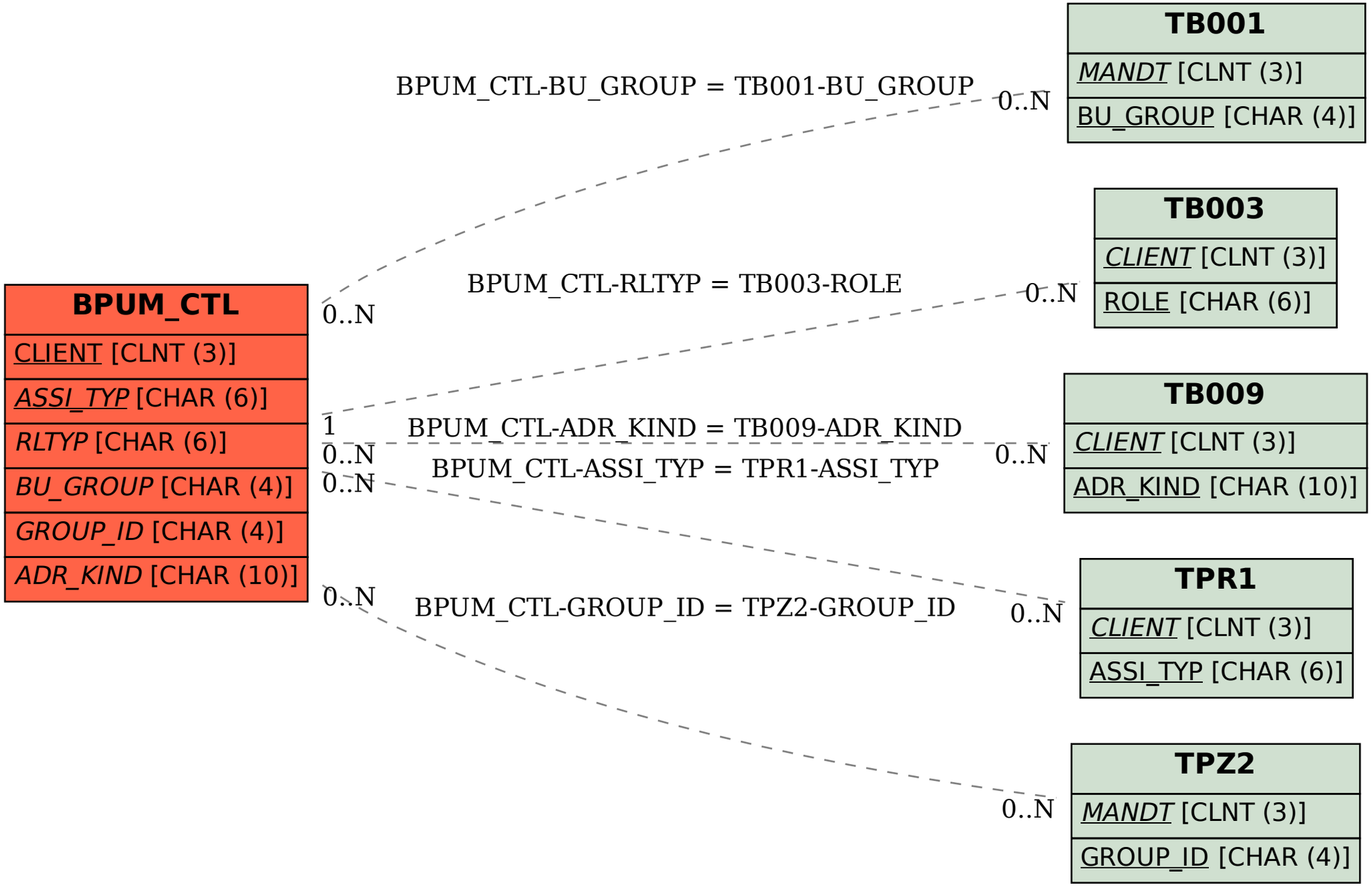SAP ABAP table BPUM_CTL {Business partner: Conversion control}