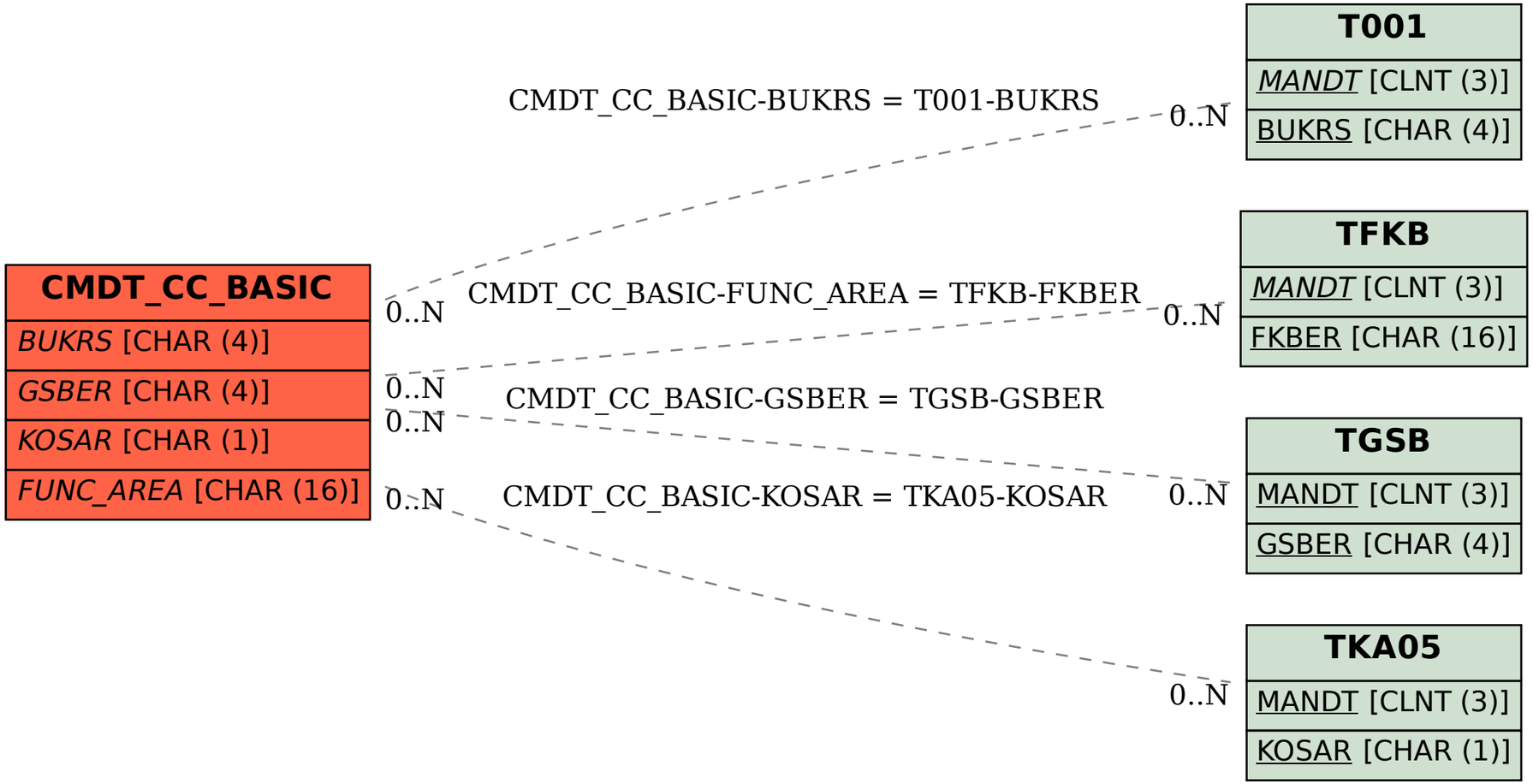SAP ABAP table CMDT_CC_BASIC {Generic Master Data: Cost Center Enhancements - Basic Data}