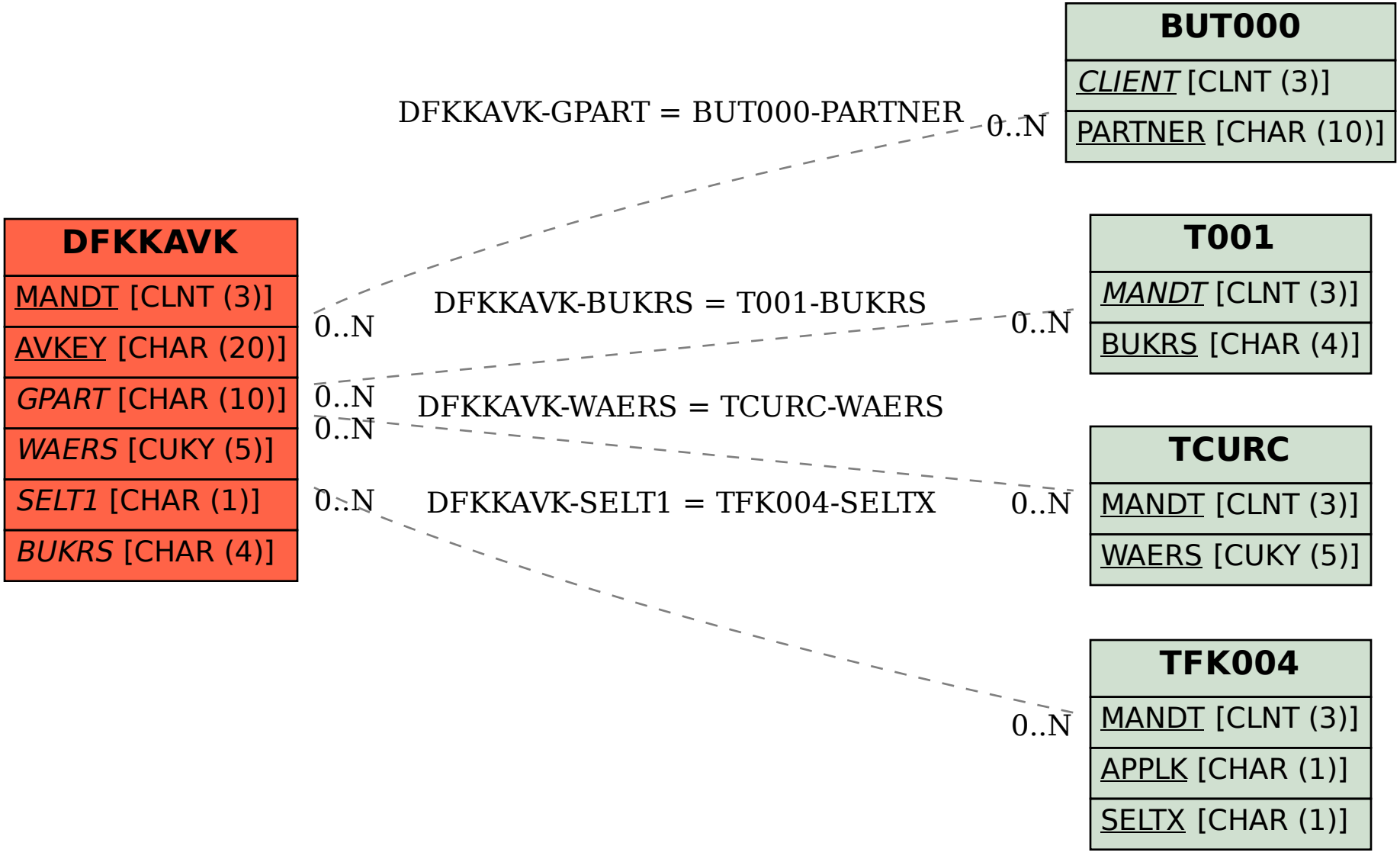SAP ABAP table DFKKAVK {Payment Advice: Header Data}