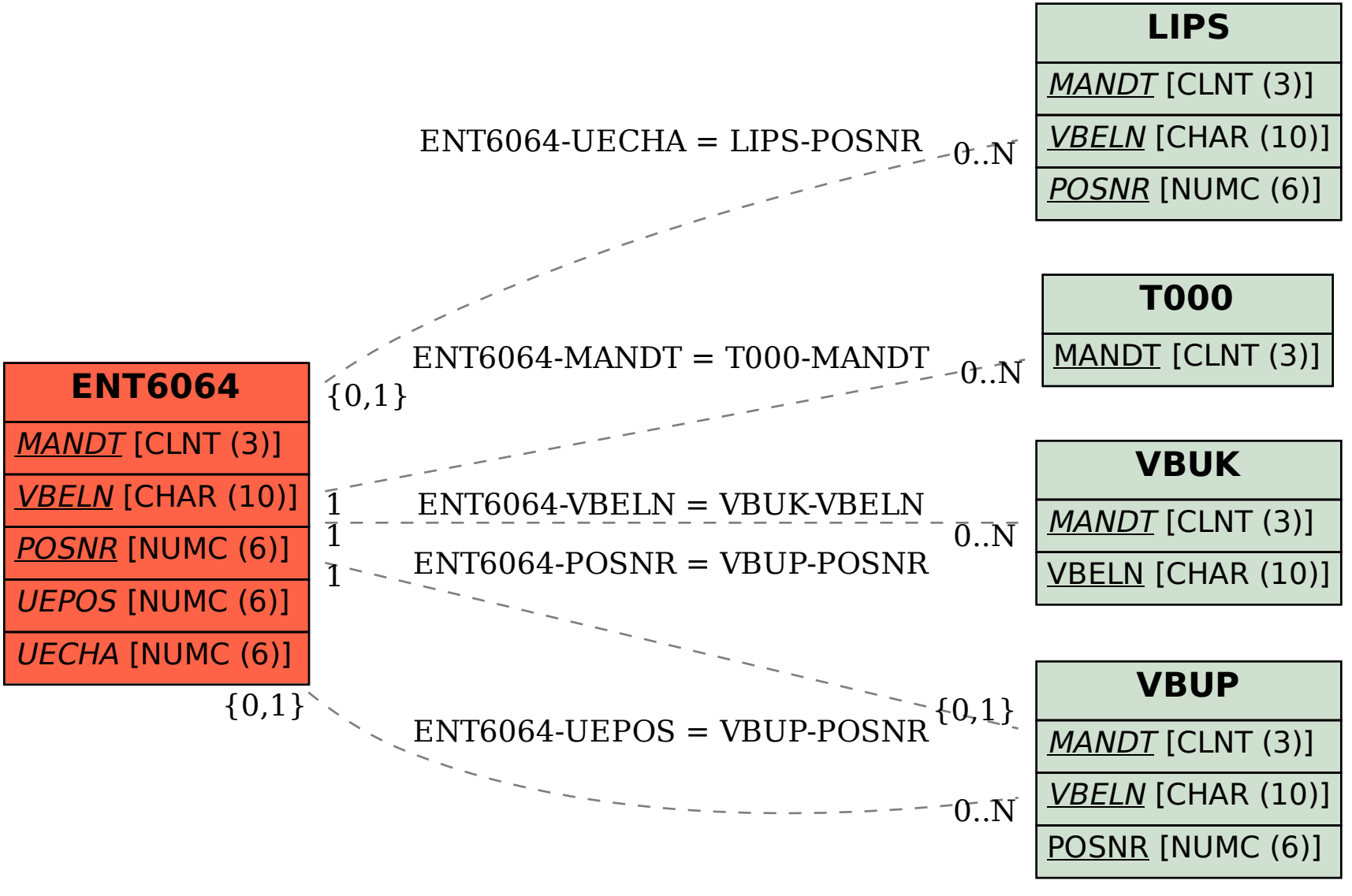SAP ABAP table ENT6064 {Generated Table for View}