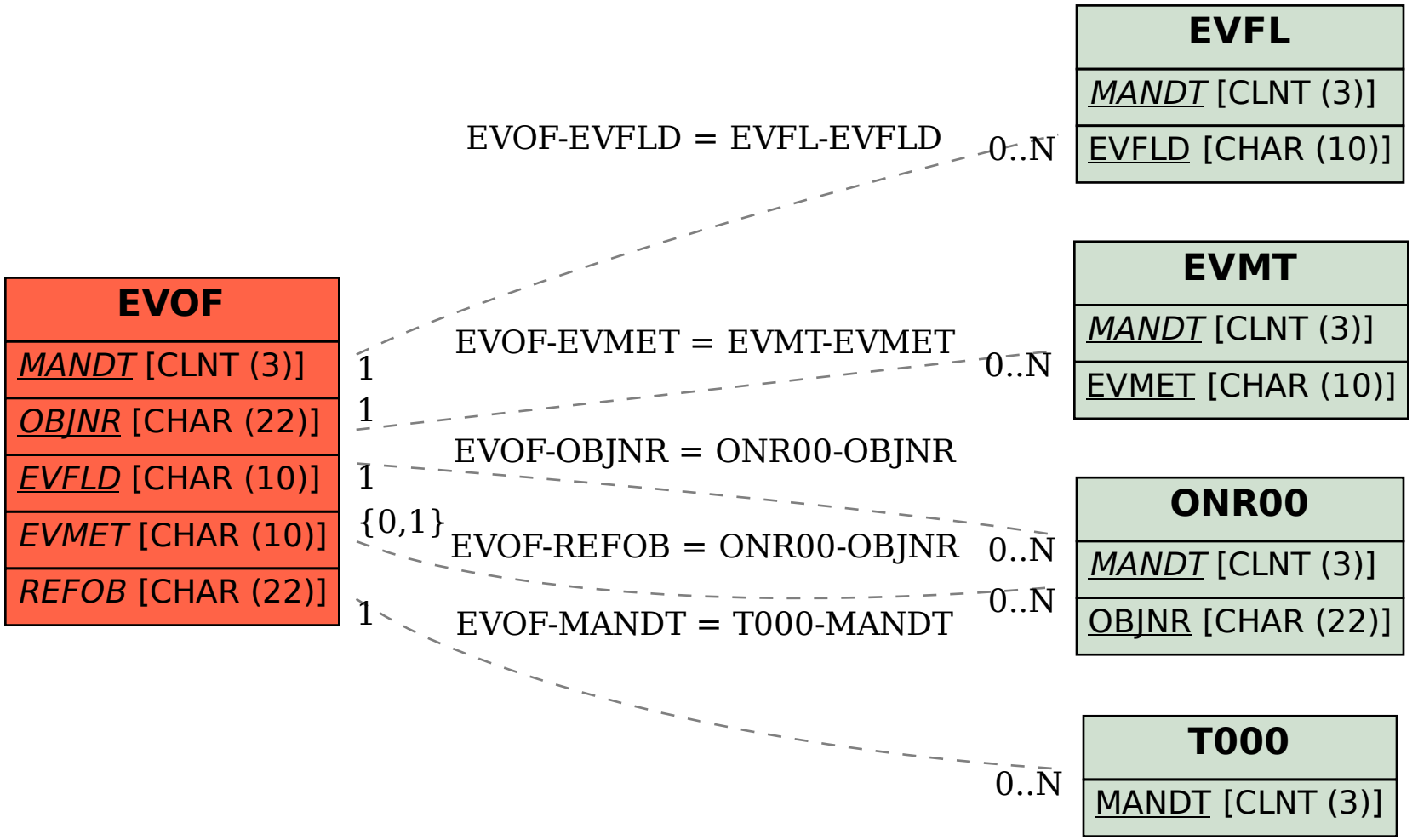SAP ABAP table EVOF {CNE5: Object parameter PS earned value analysis}