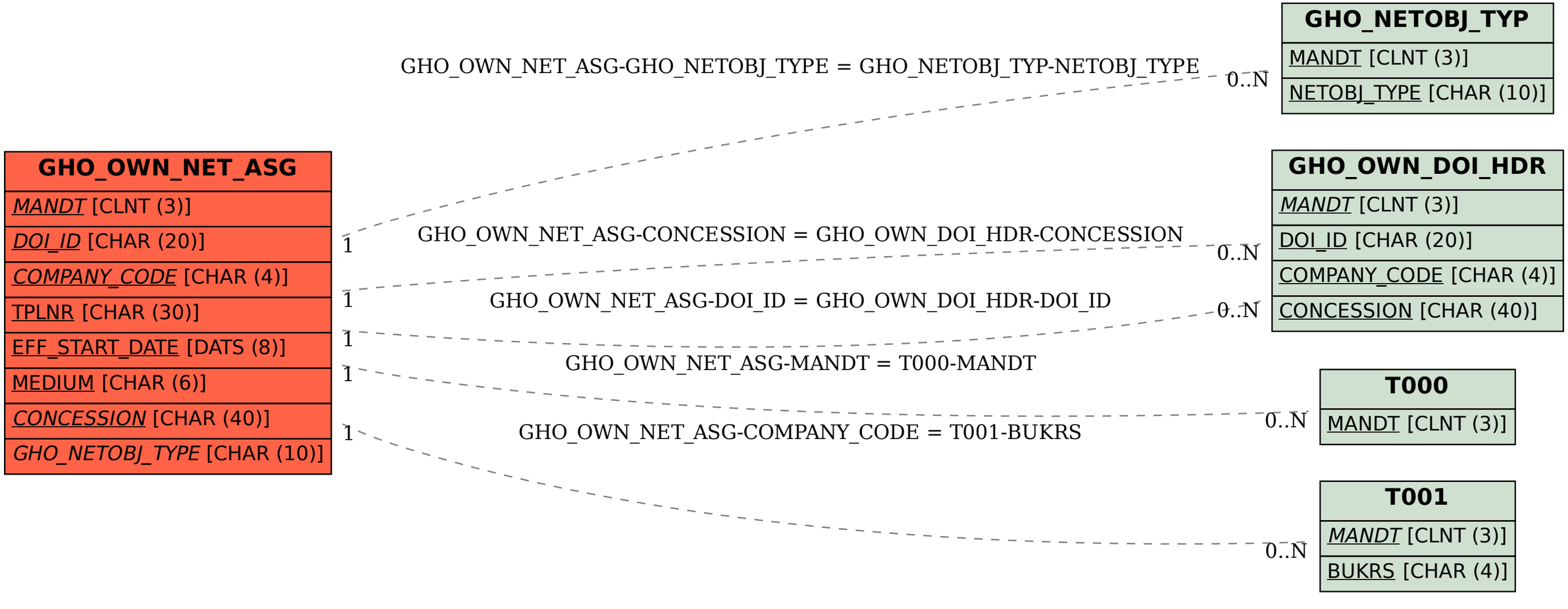SAP ABAP table GHO_OWN_NET_ASG {Ownership (DOI) assignment to Network Objects}