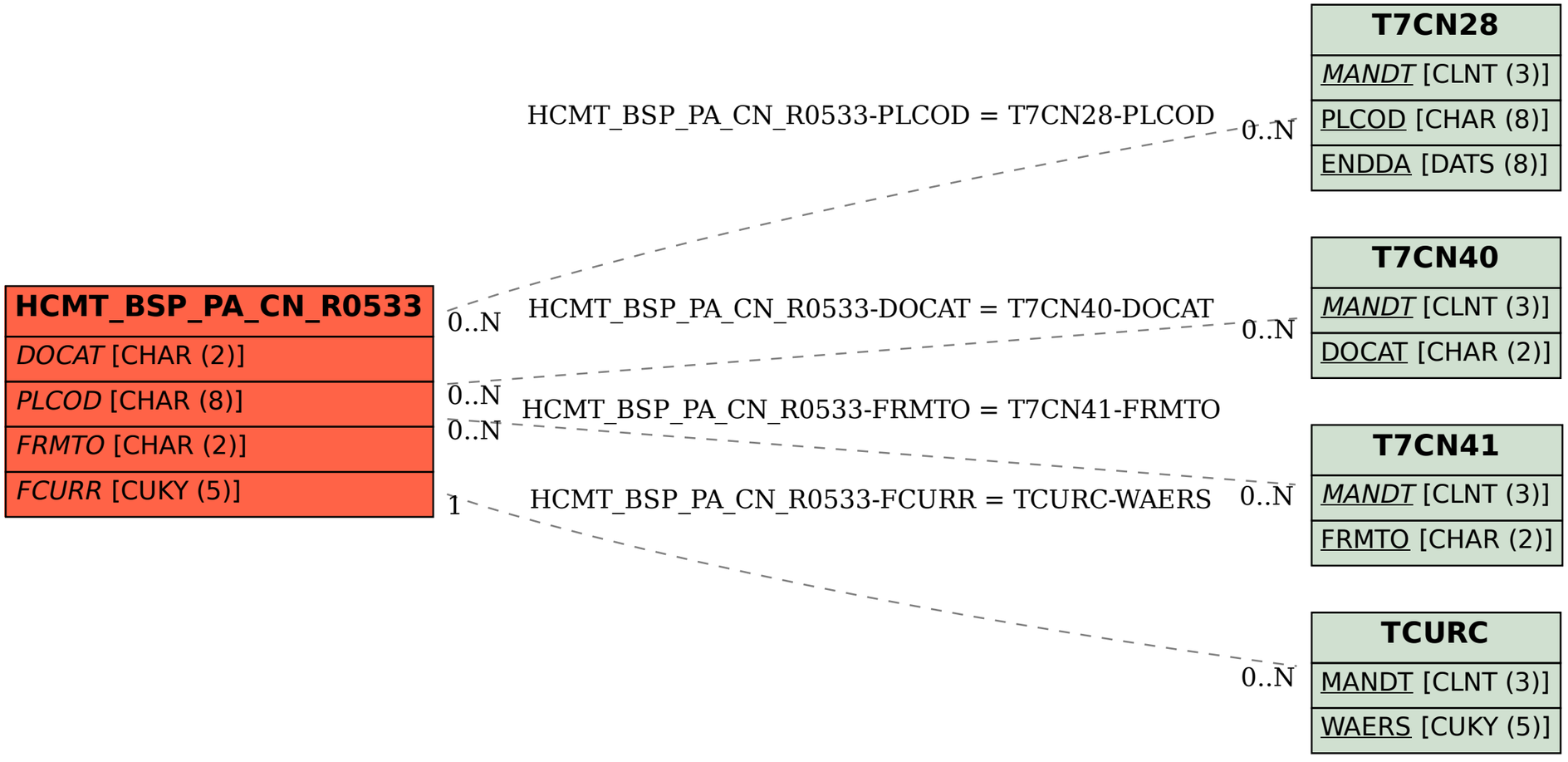SAP ABAP table HCMT_BSP_PA_CN_R0533 {Single Screen for Infotype 0533 (Personal File Management)}