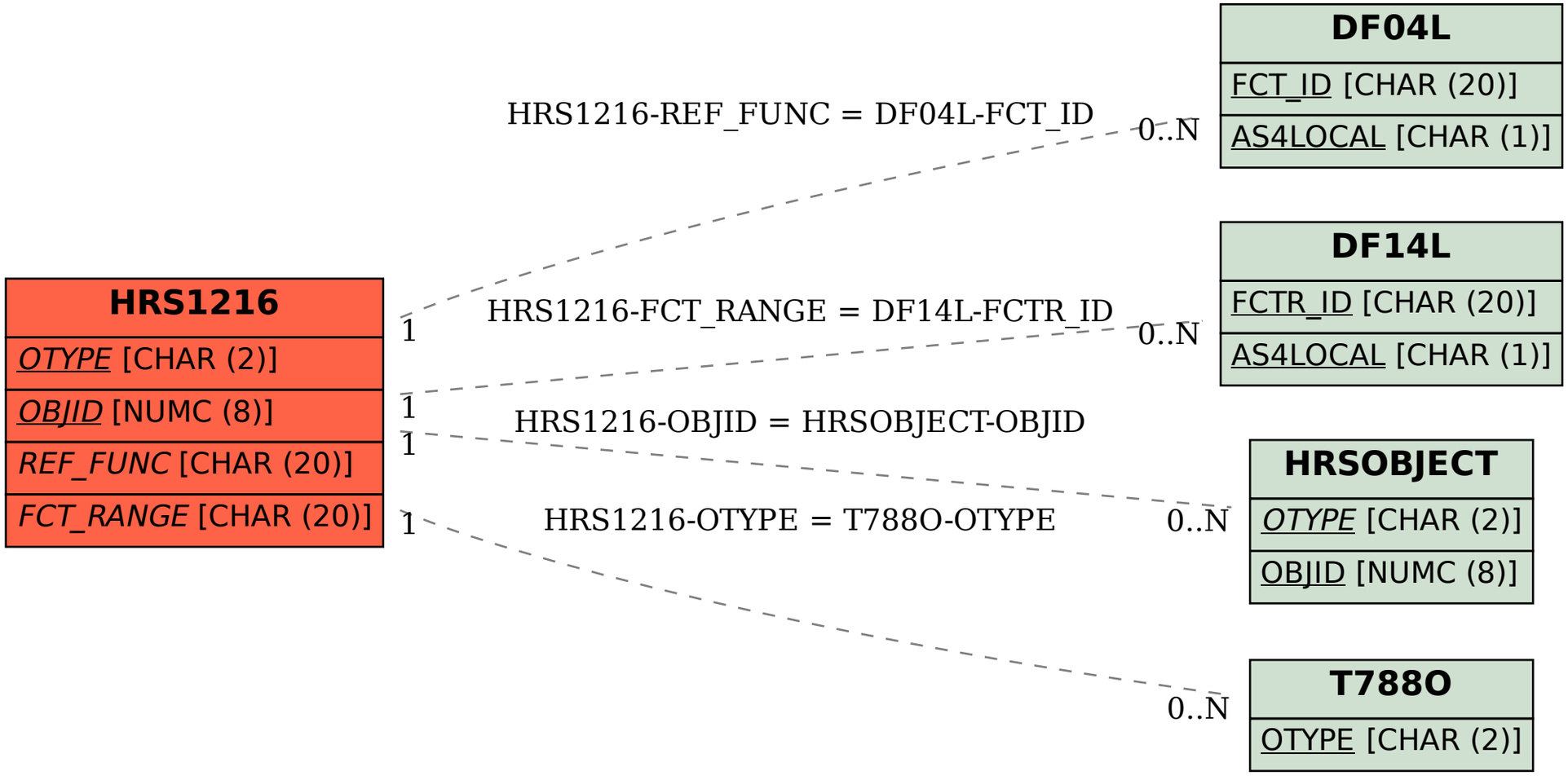SAP ABAP table HRS1216 {Standard Infotype 1216 (SAP) Assigned Reference Function}