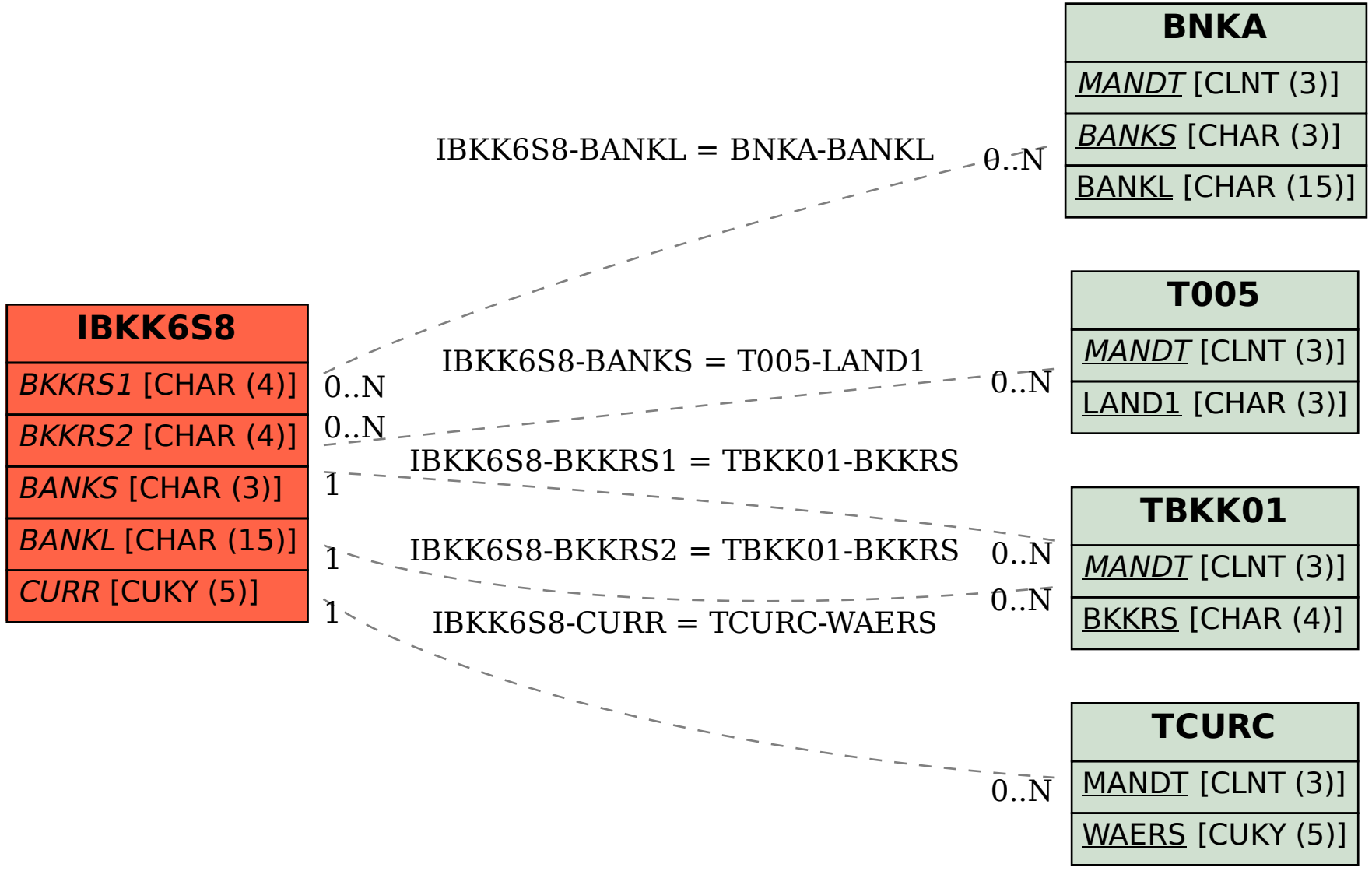SAP ABAP table IBKK6S8 {Cash Concentration: Carry Forwards Determined}