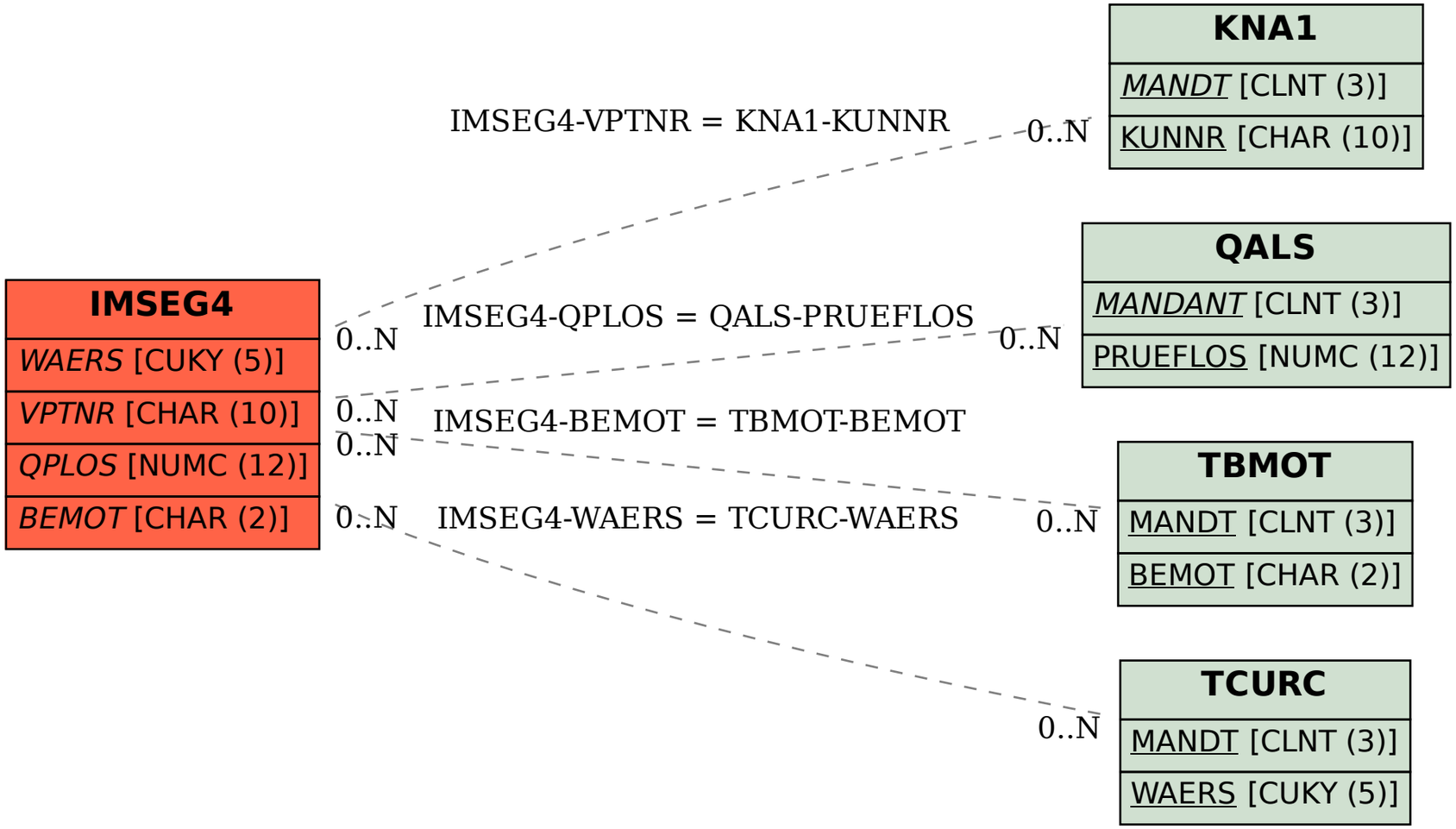SAP ABAP table IMSEG4 {MMIM: Input Structure for FM for Goods Mvmt: Data(onlyIMSEG)}