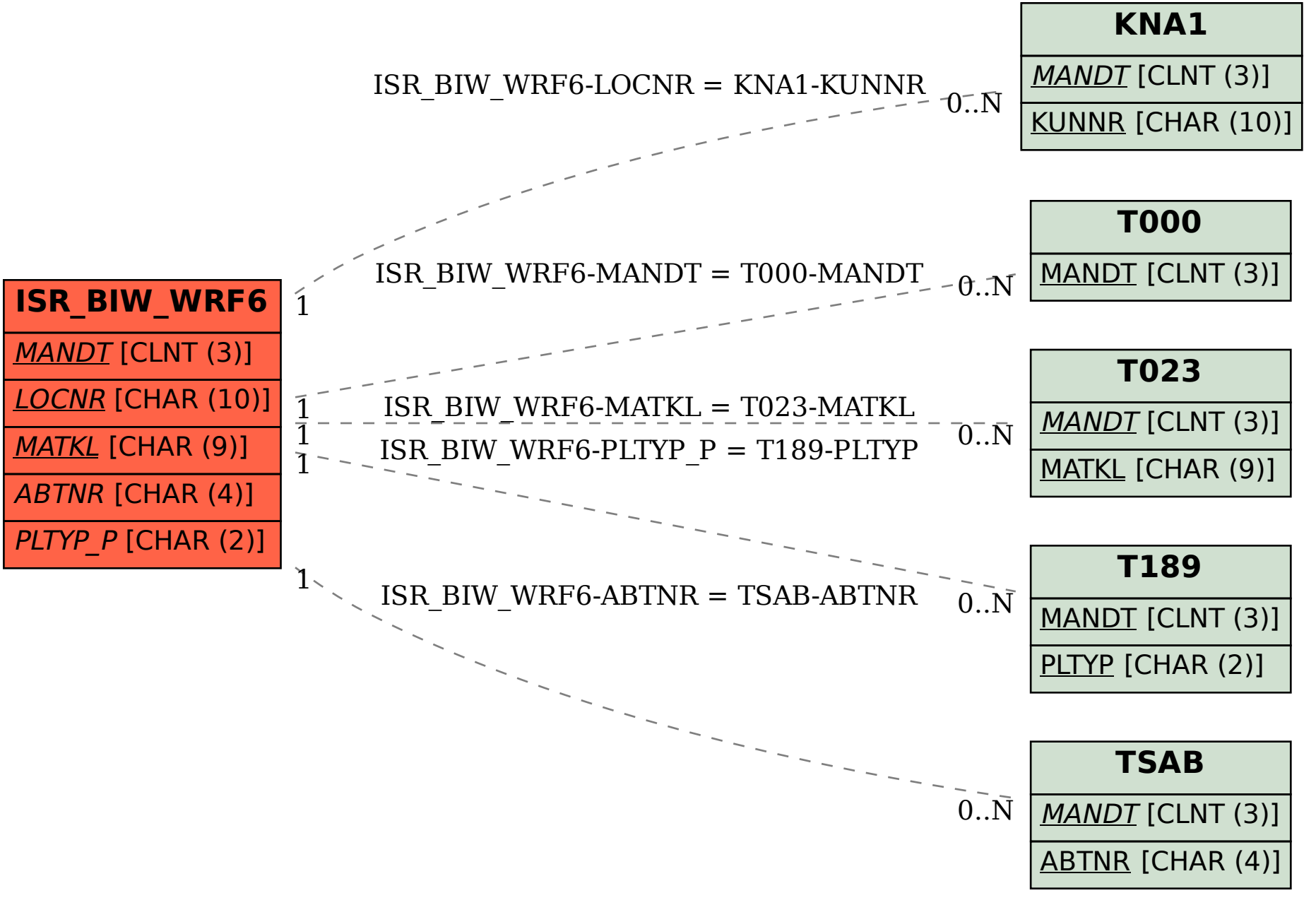SAP ABAP table ISR_BIW_WRF6 {Generated Table for View}