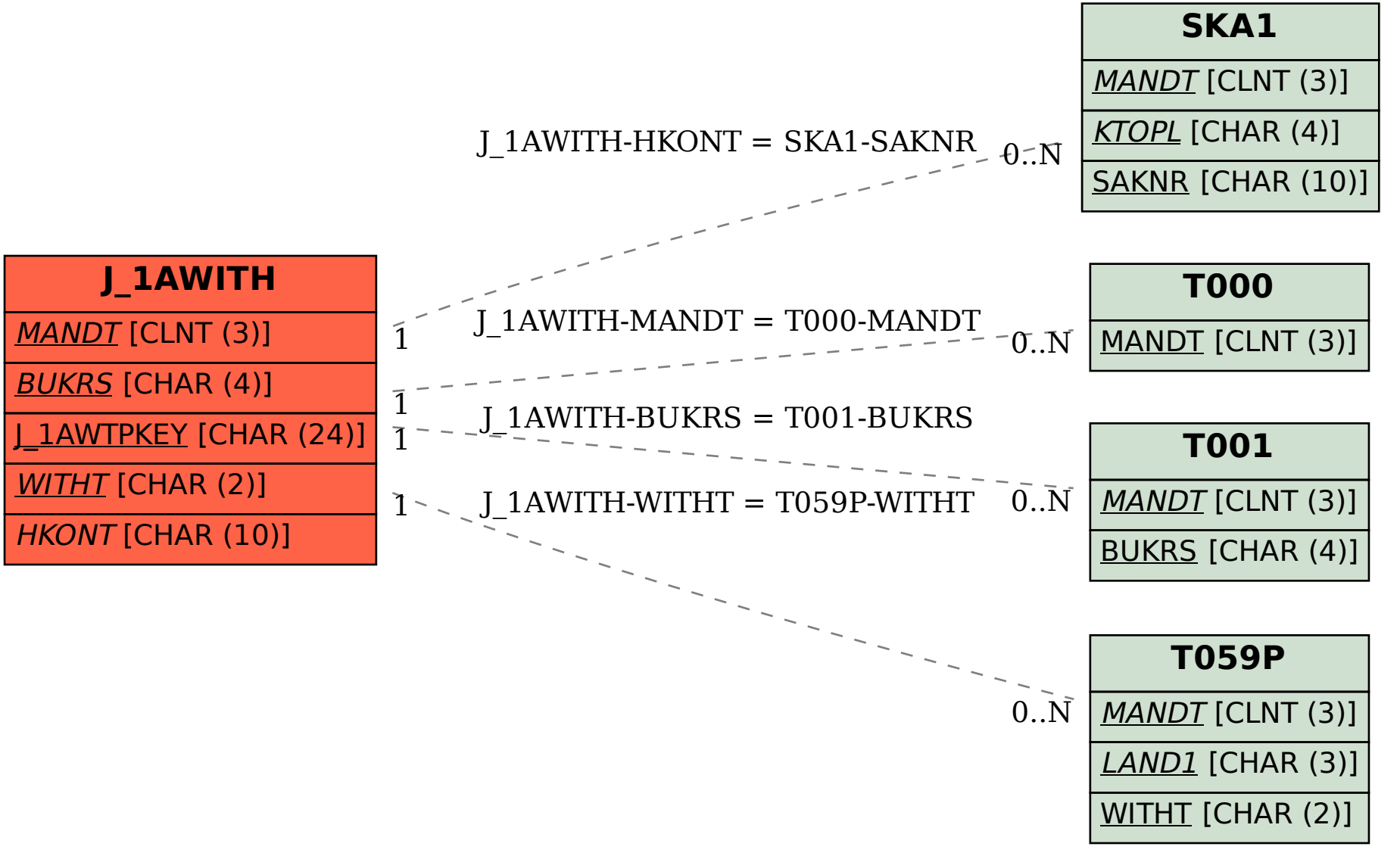# SAP ABAP table J_1AWITH {Withholding transaction data}