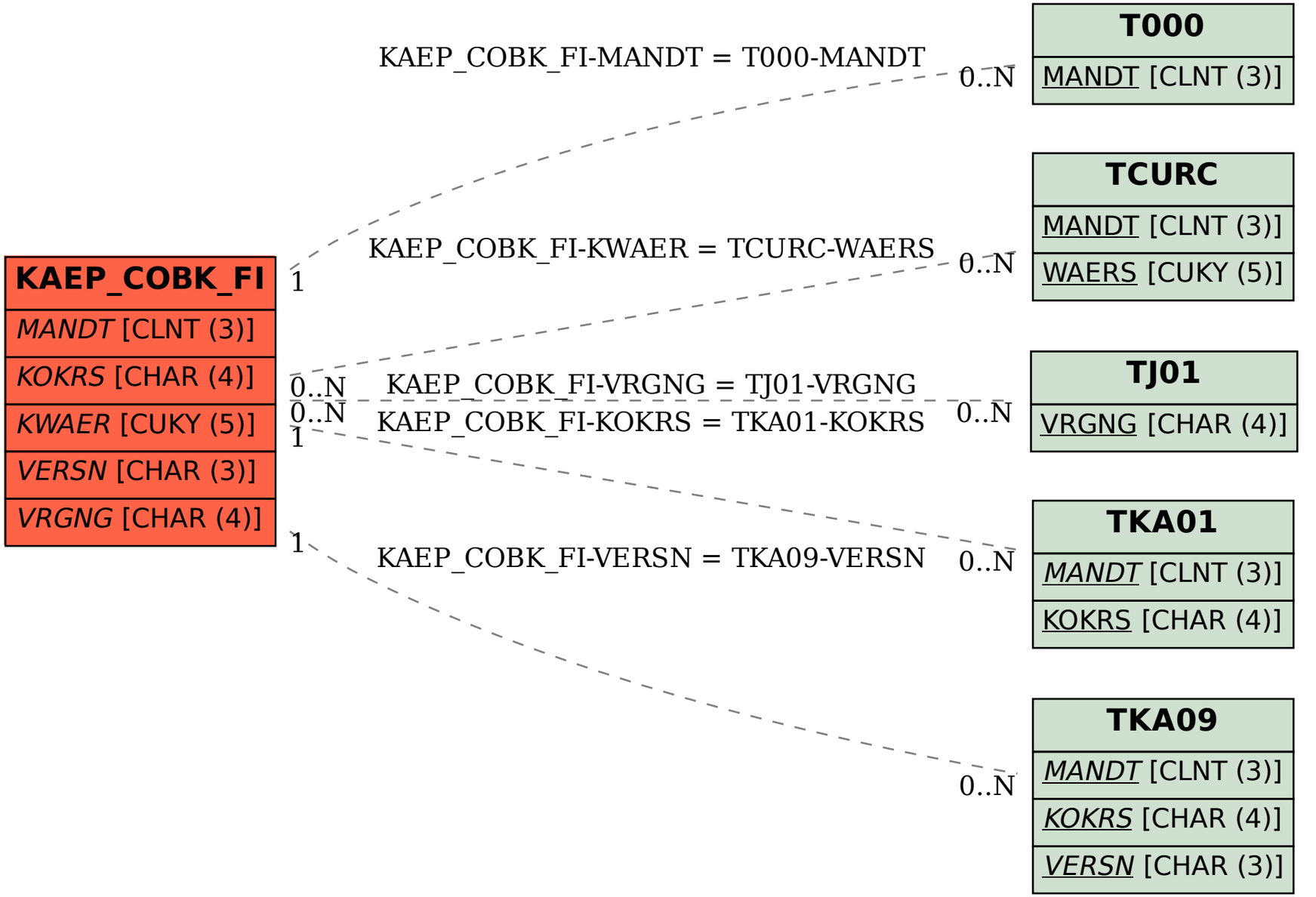SAP ABAP table KAEP_COBK_FI {Item field list for financial line item report doc.header}