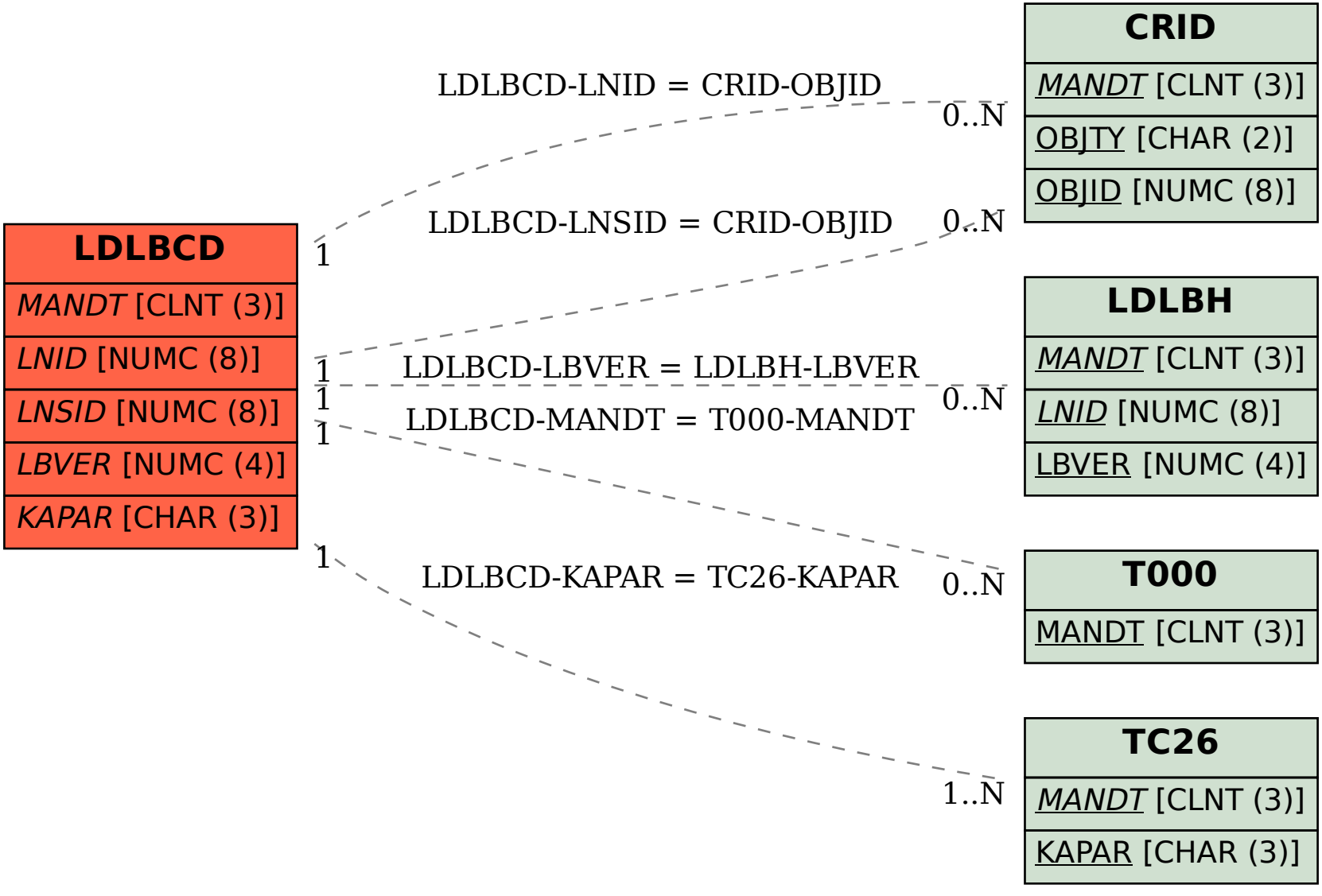SAP ABAP table LDLBCD {Capacities of a line segment - dialog -}