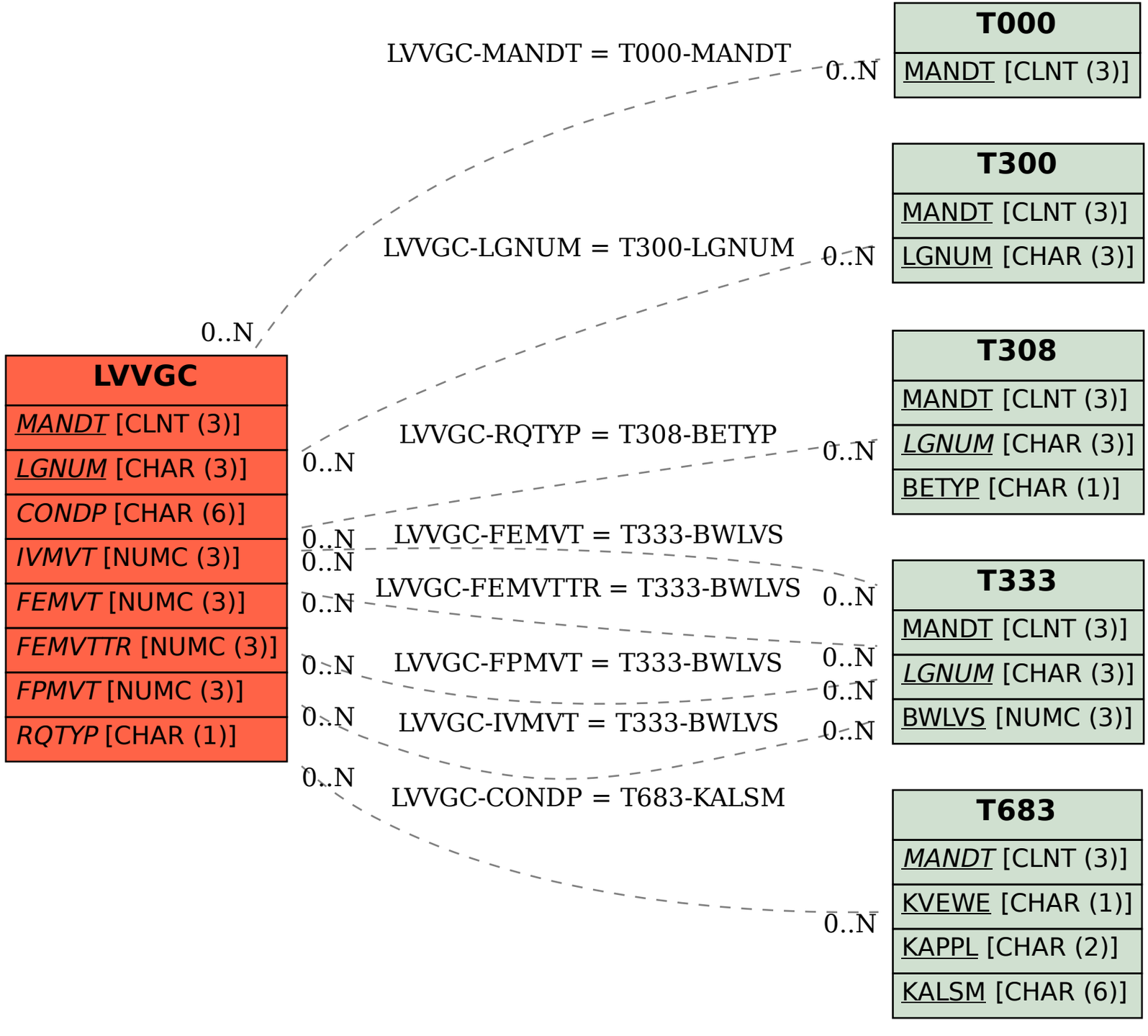SAP ABAP table LVVGC {Value-Added Services (VAS) general customization}