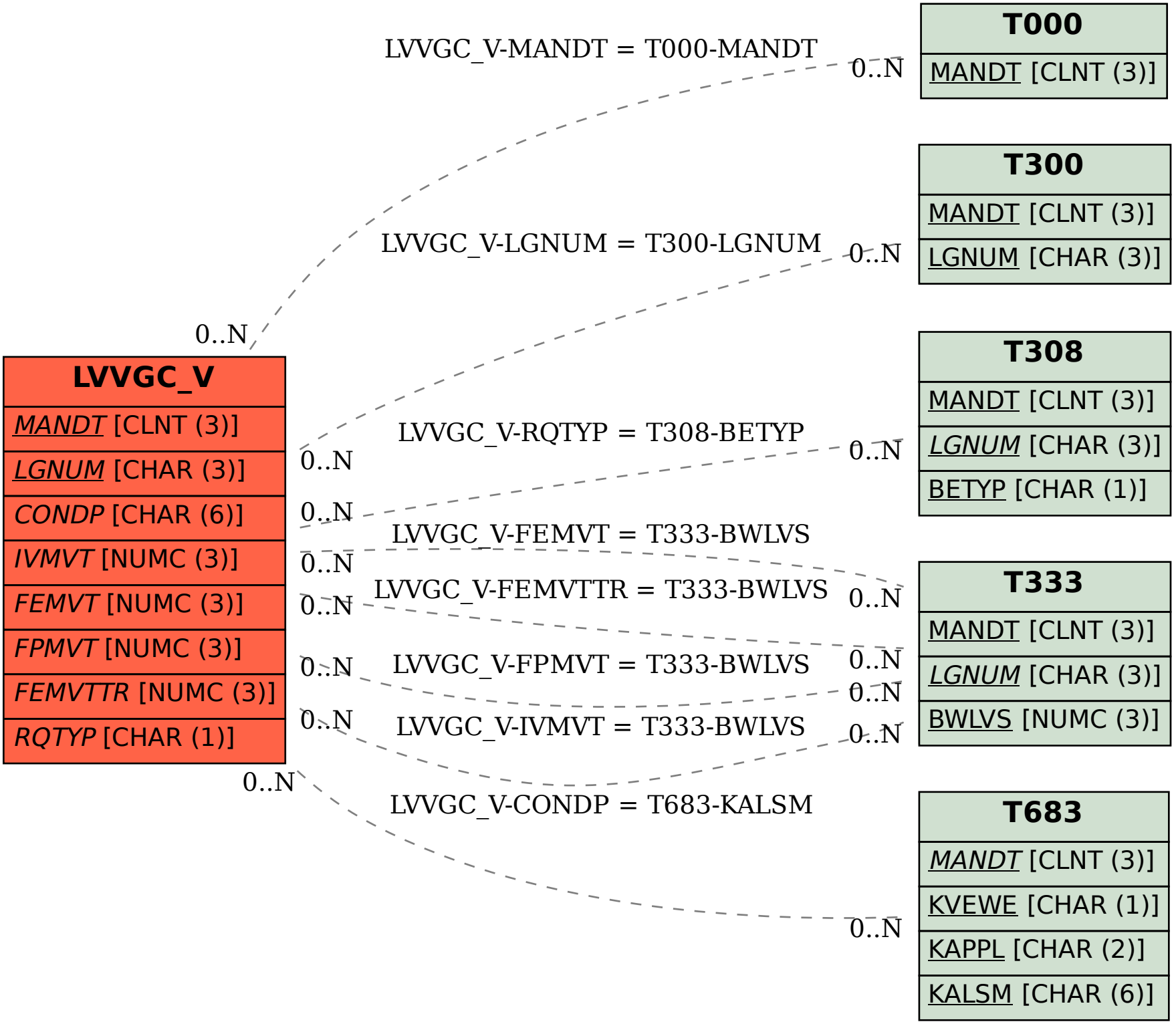SAP ABAP table LVVGC_V {Generated Table for View LVVGC_V}