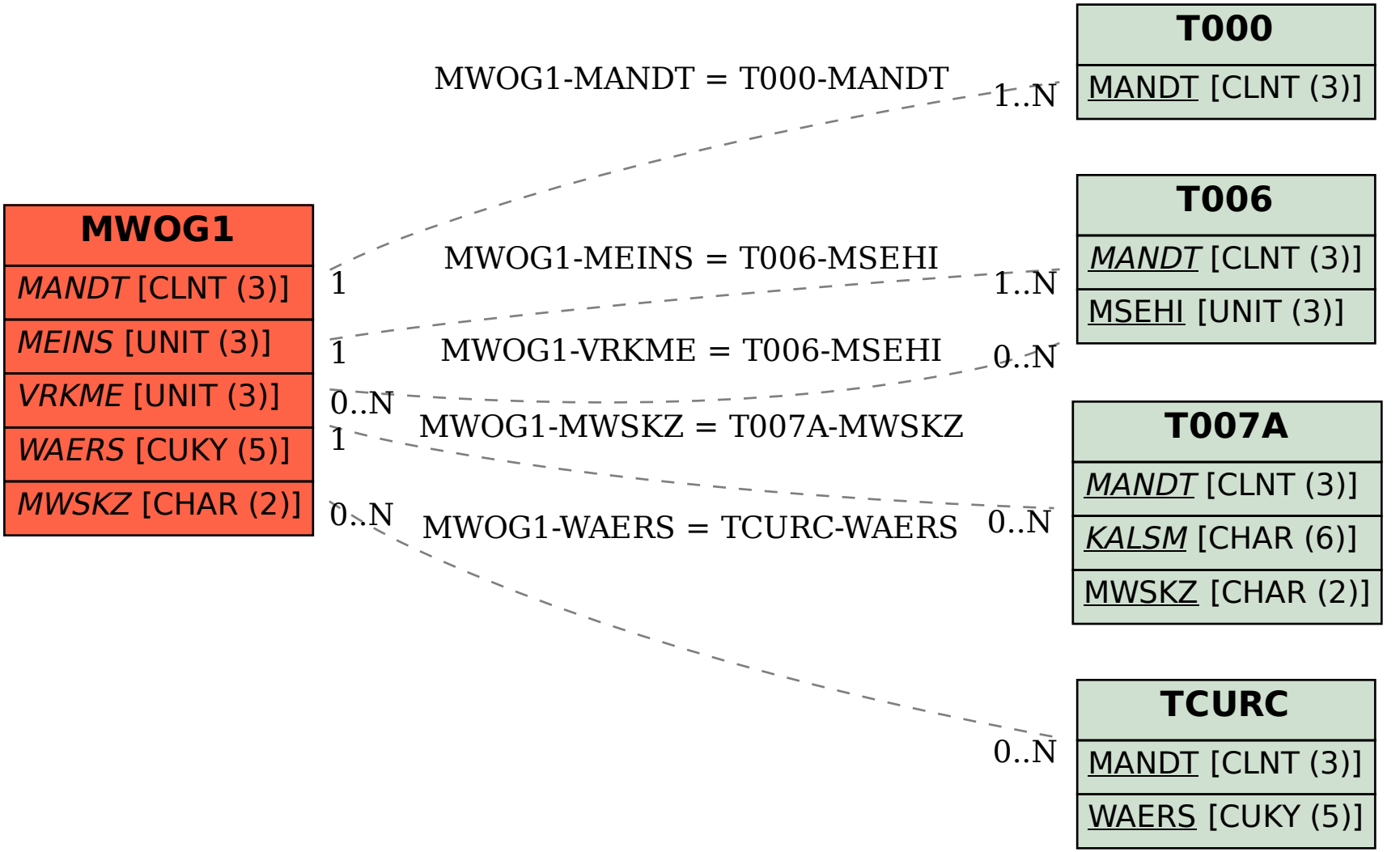SAP ABAP table MWOG1 {I/O line for RP for perishables}