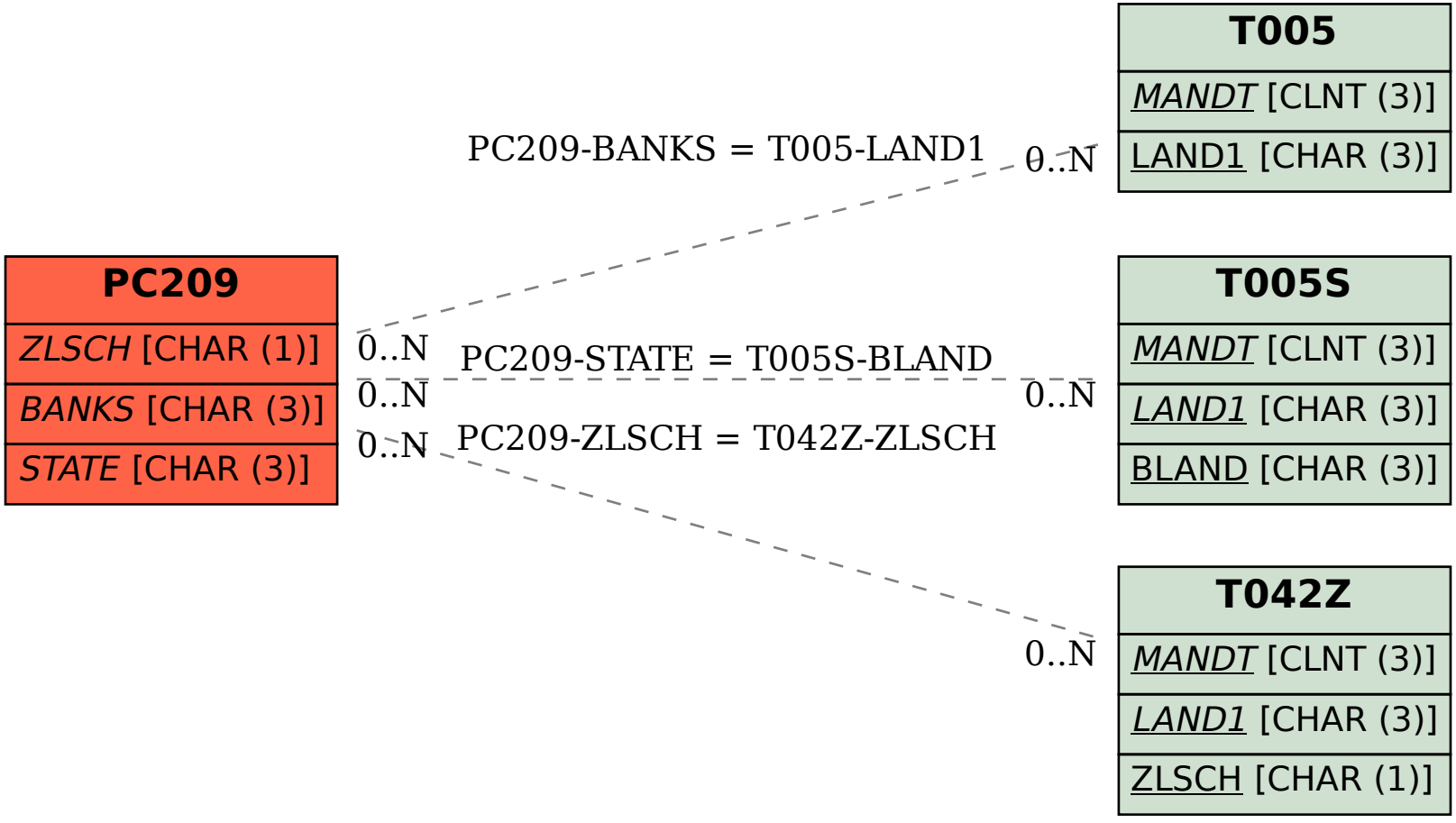SAP ABAP table PC209 {Payroll Results: Bank Transfers}