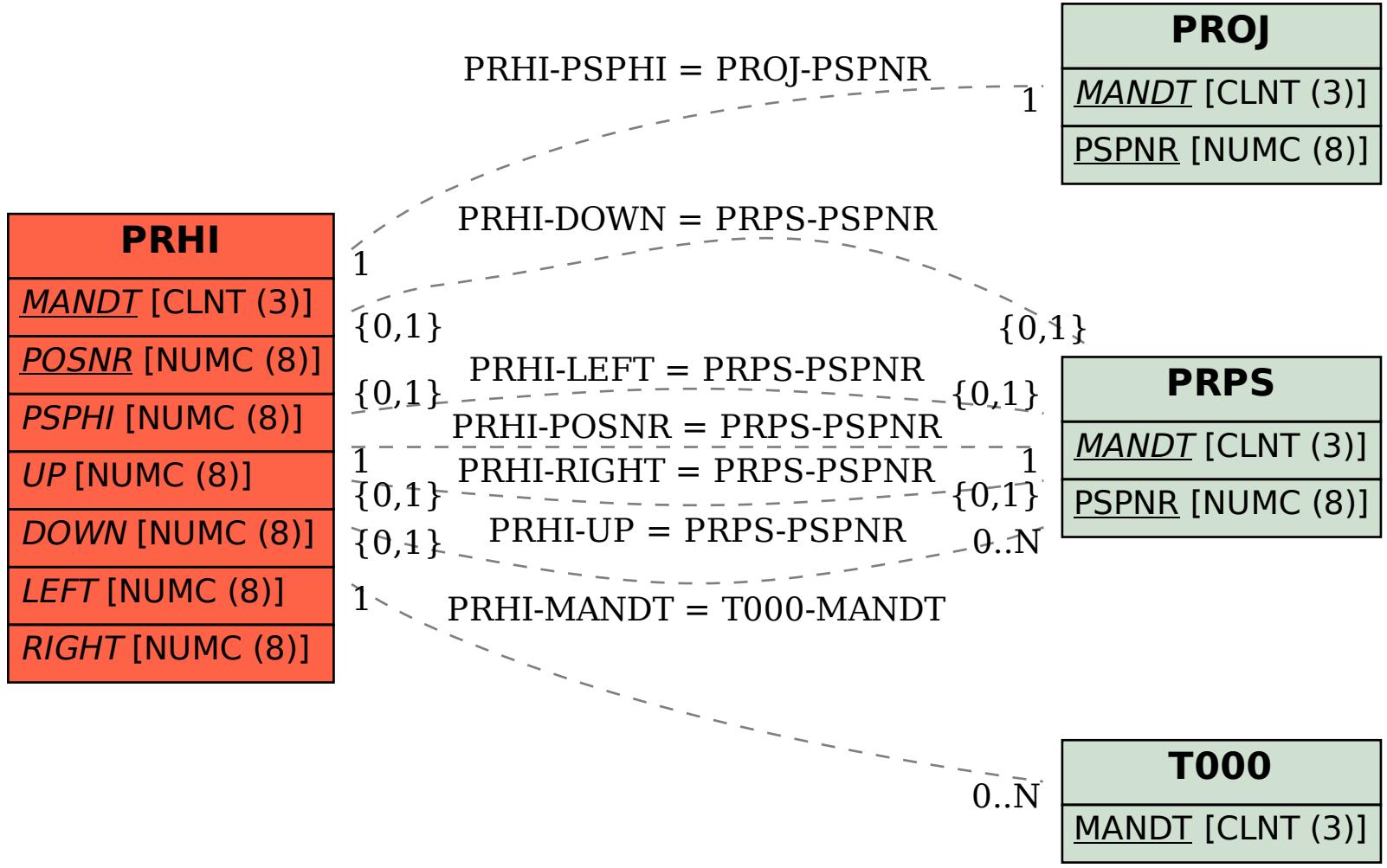SAP ABAP table PRHI {Work Breakdown Structure, Edges (Hierarchy Pointer)}