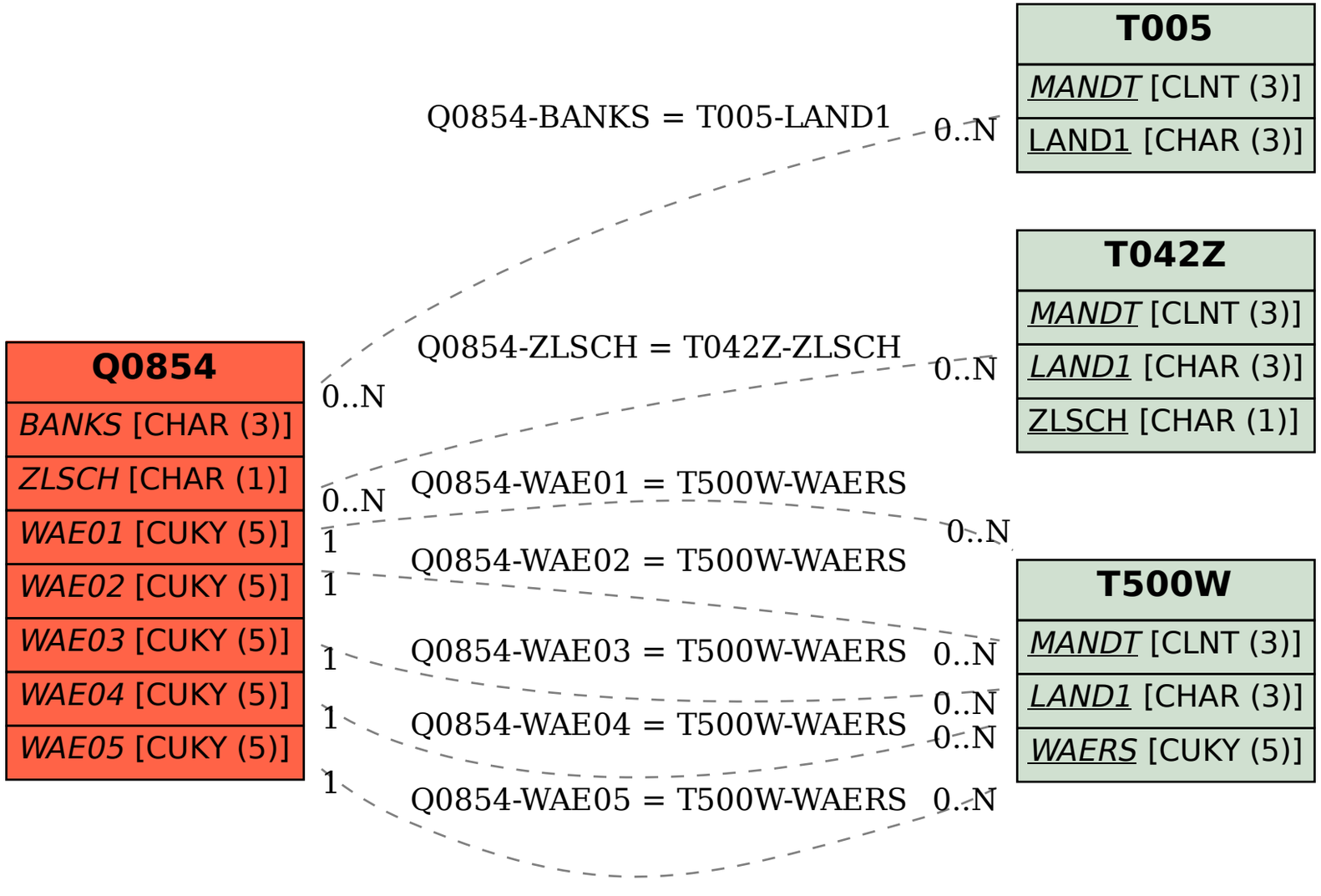SAP ABAP table Q0854 {Screen Fields for Infotype 0854 (Life-Course Savings Scheme)}