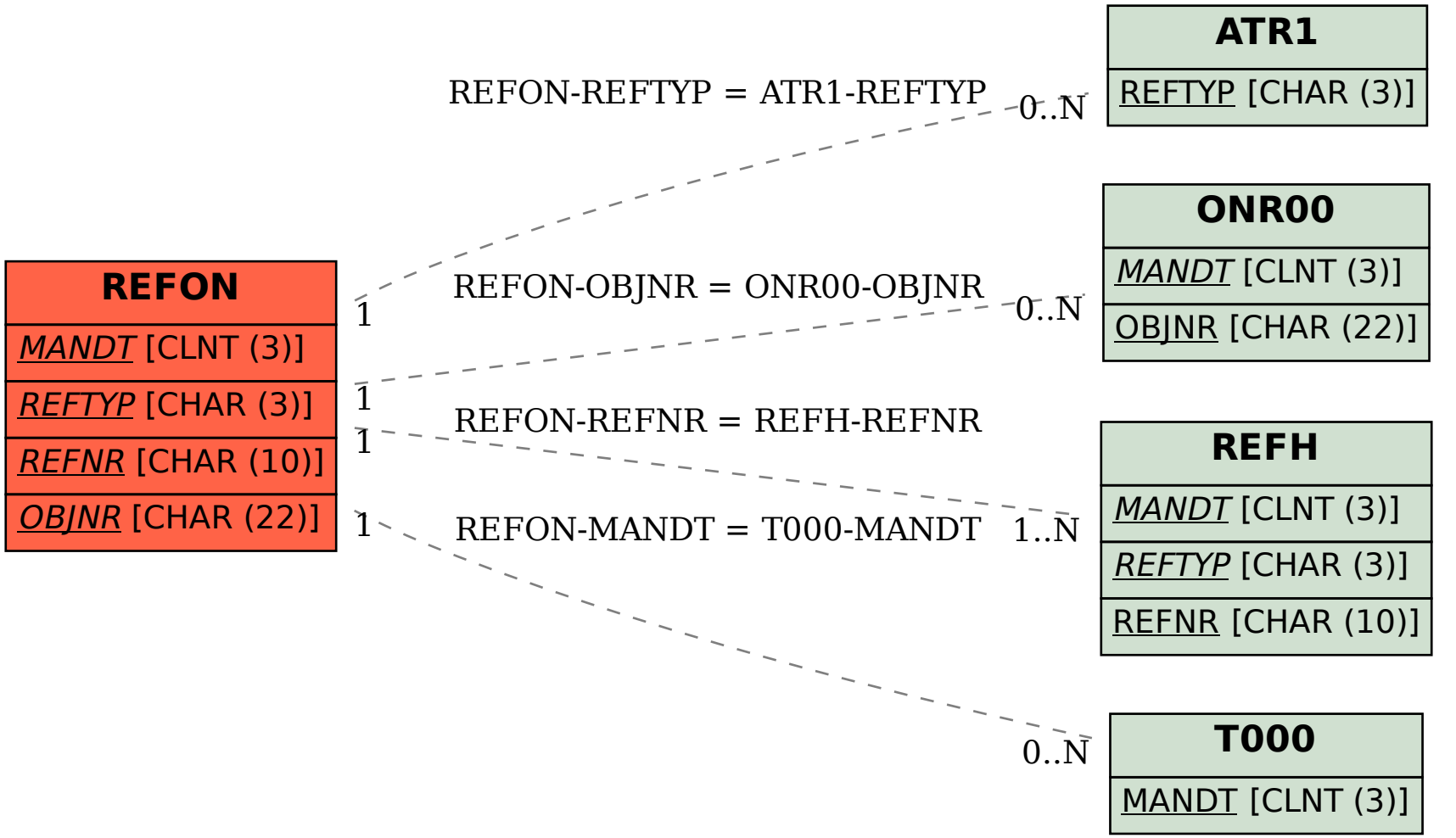SAP ABAP table REFON {References between object numbers (CO object no.)}