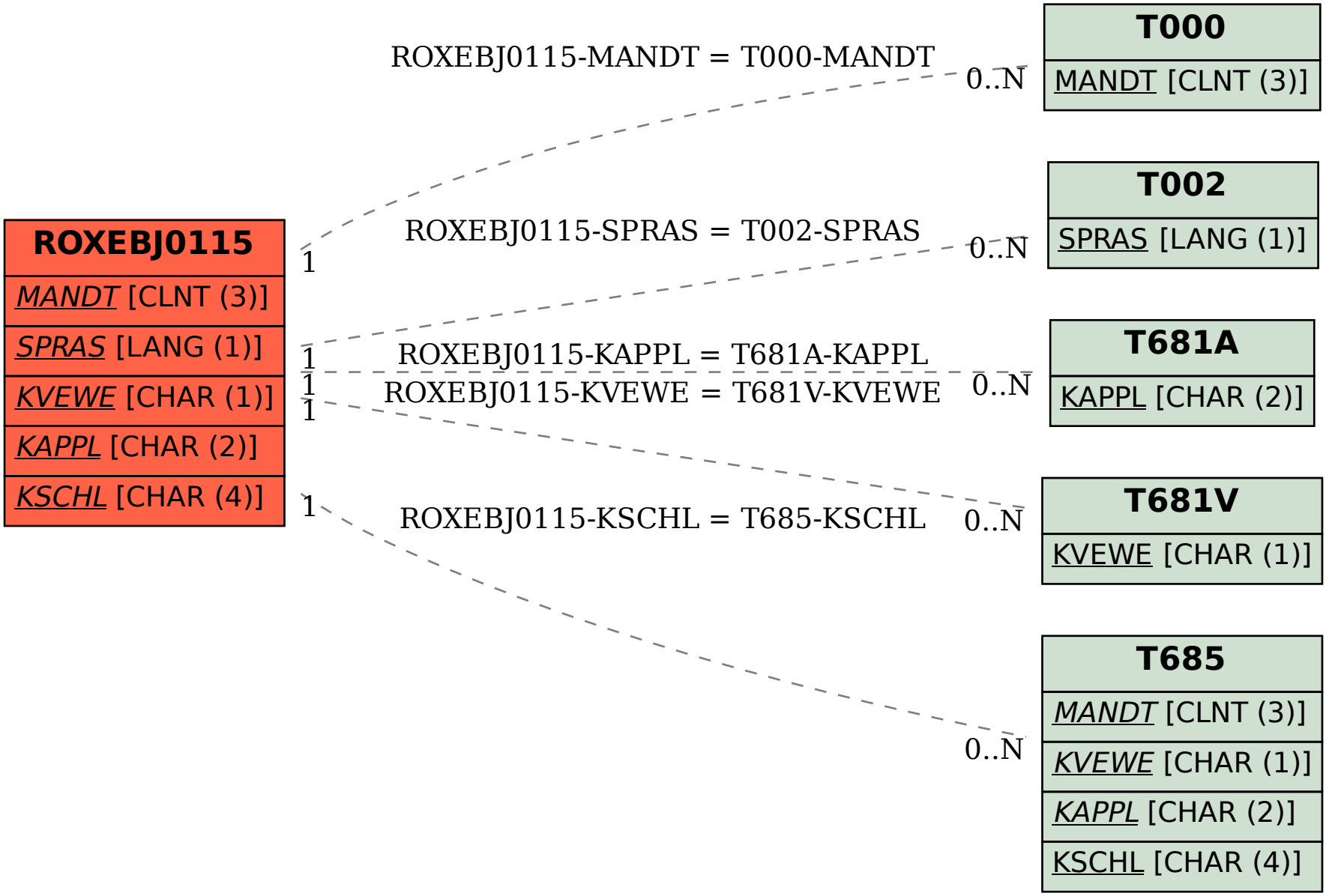SAP ABAP table ROXEBJ0115 {Conditions: Types: Texts}