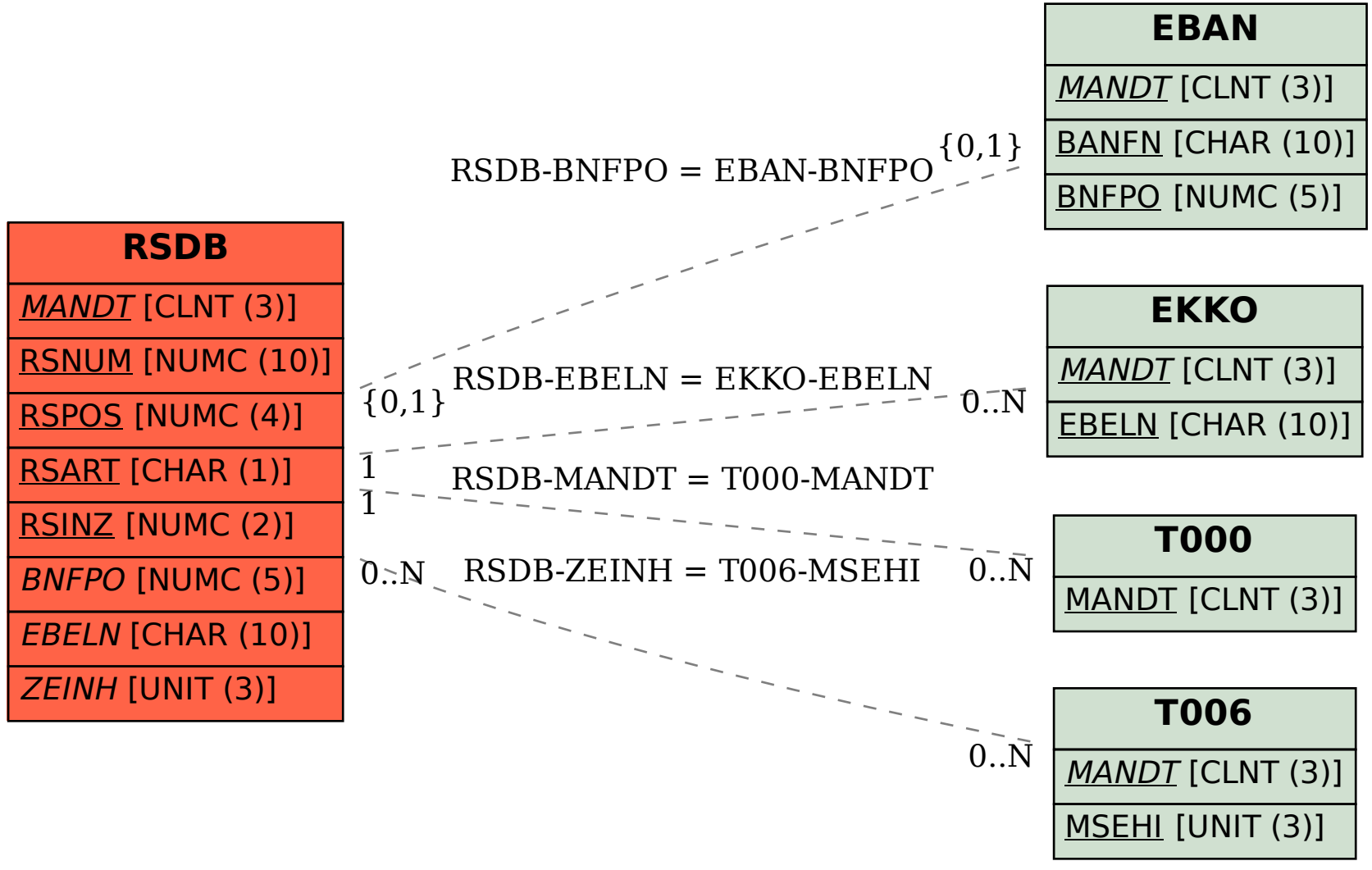SAP ABAP table RSDB {Index of the RESB for the Direct Procurement Element}