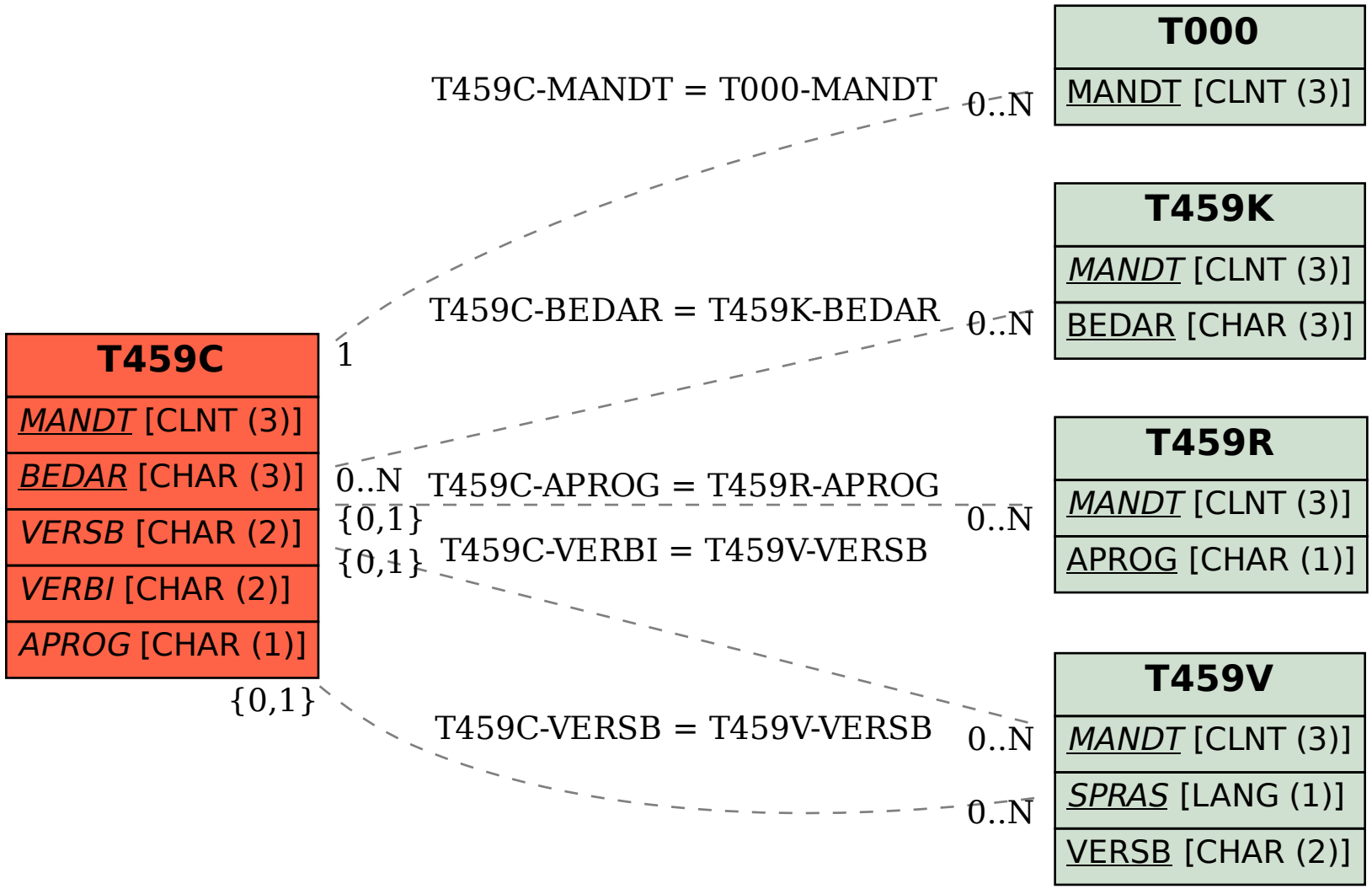SAP ABAP table T459C {Default values for independent requirements}