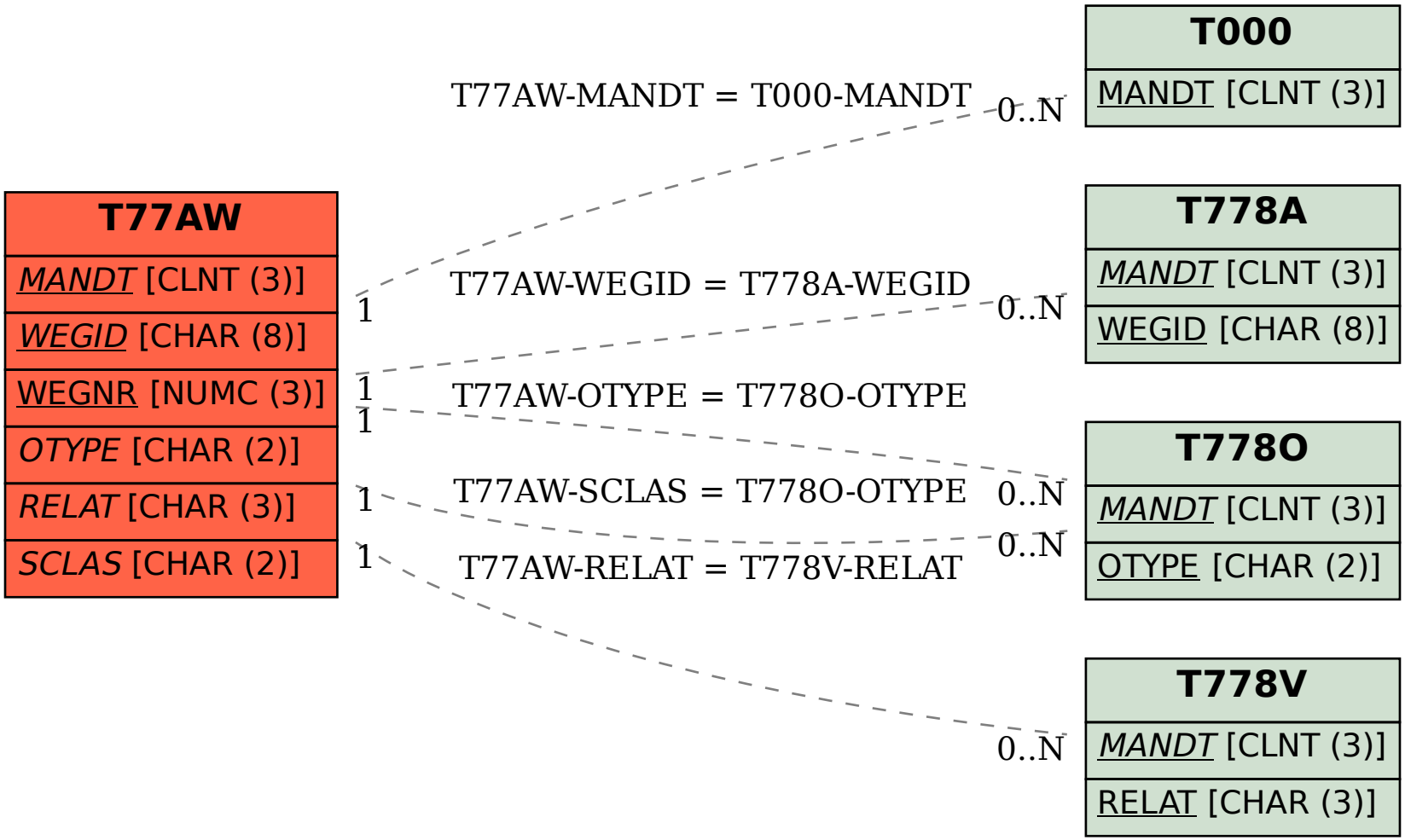SAP ABAP table T77AW {Definition of Evaluation Paths}