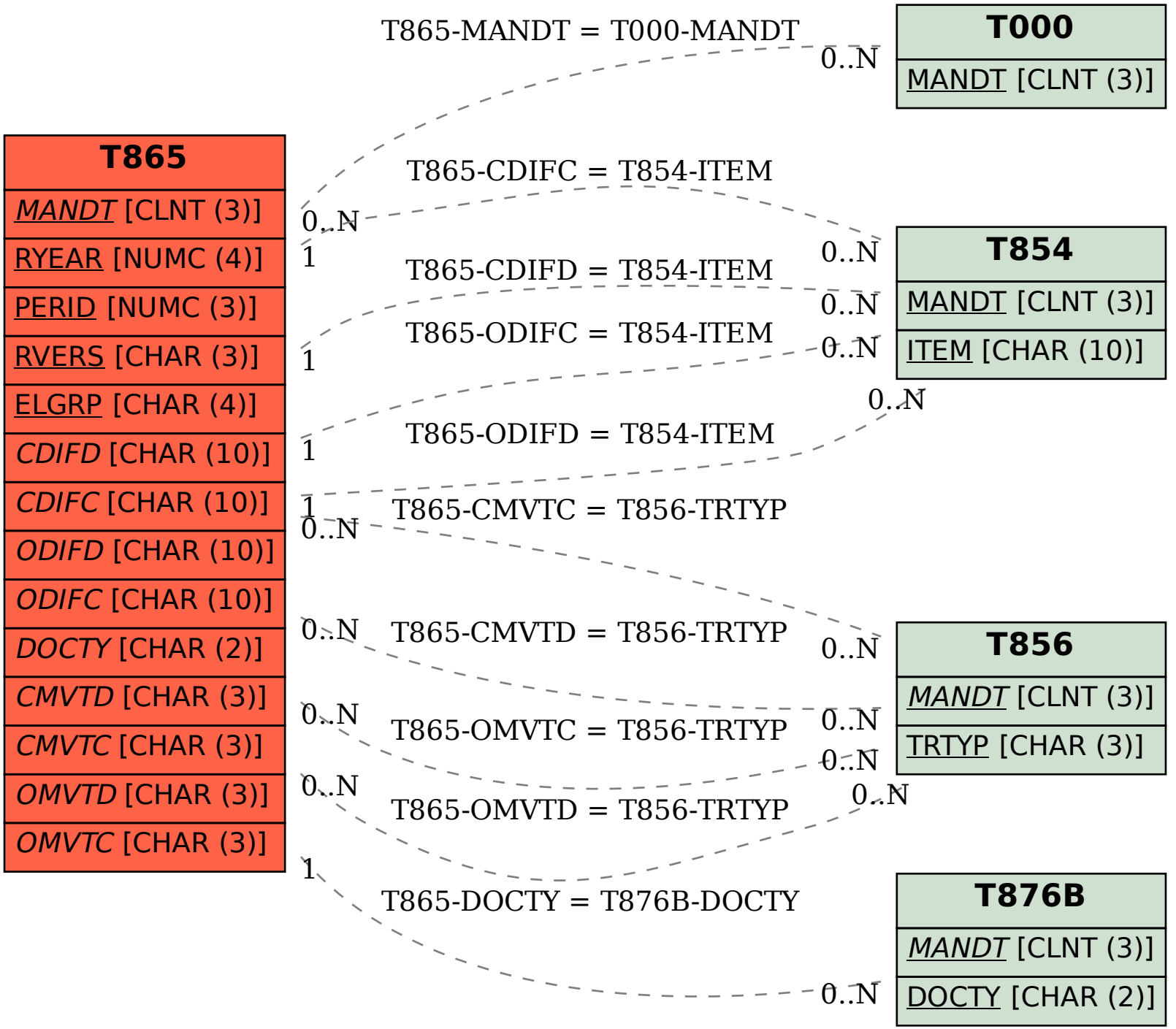SAP ABAP table T865 {Intercompany Elimination}