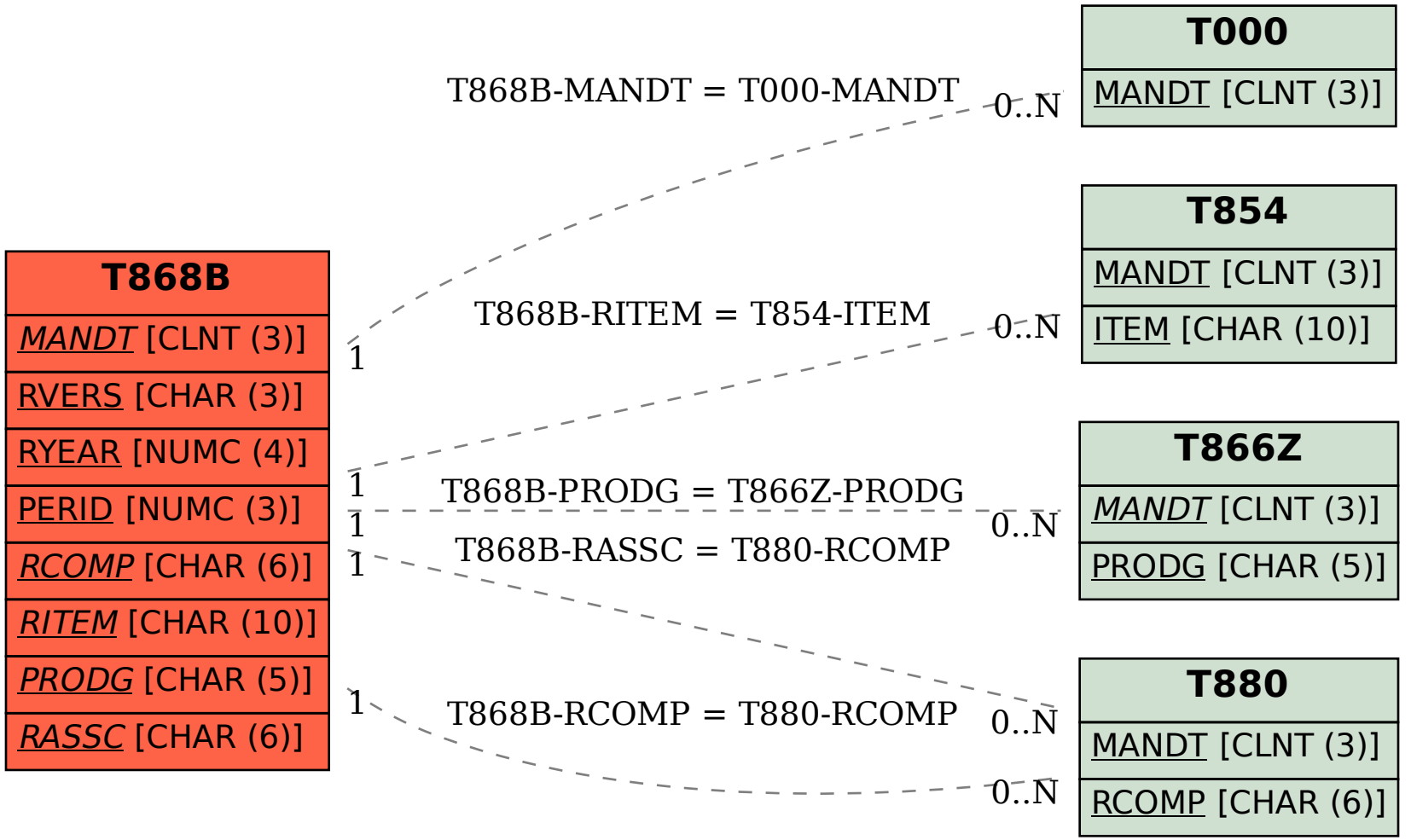SAP ABAP table T868B {Elimination of IC profit/loss: Inventory management co.s}