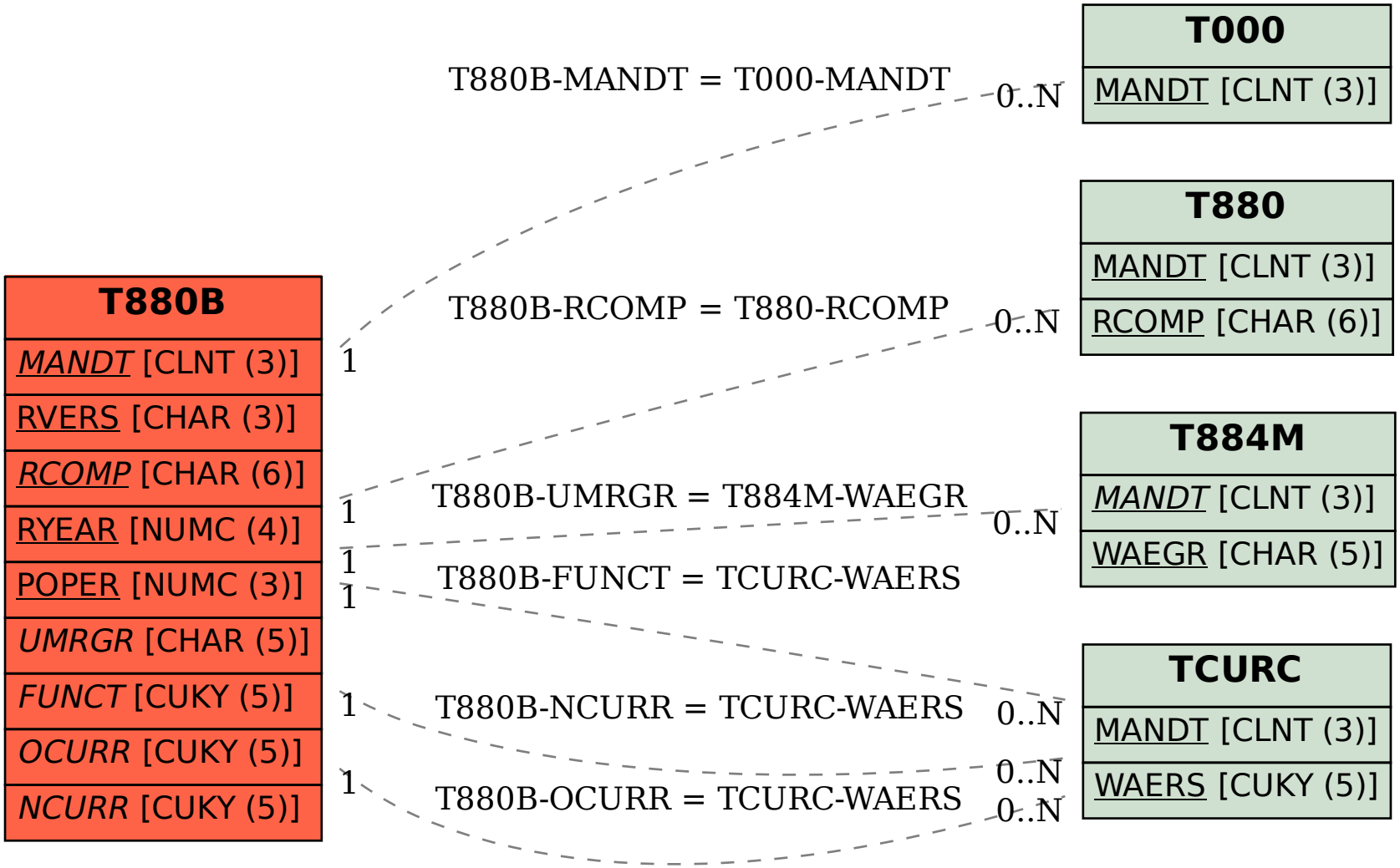SAP ABAP table T880B {Valuation methods}