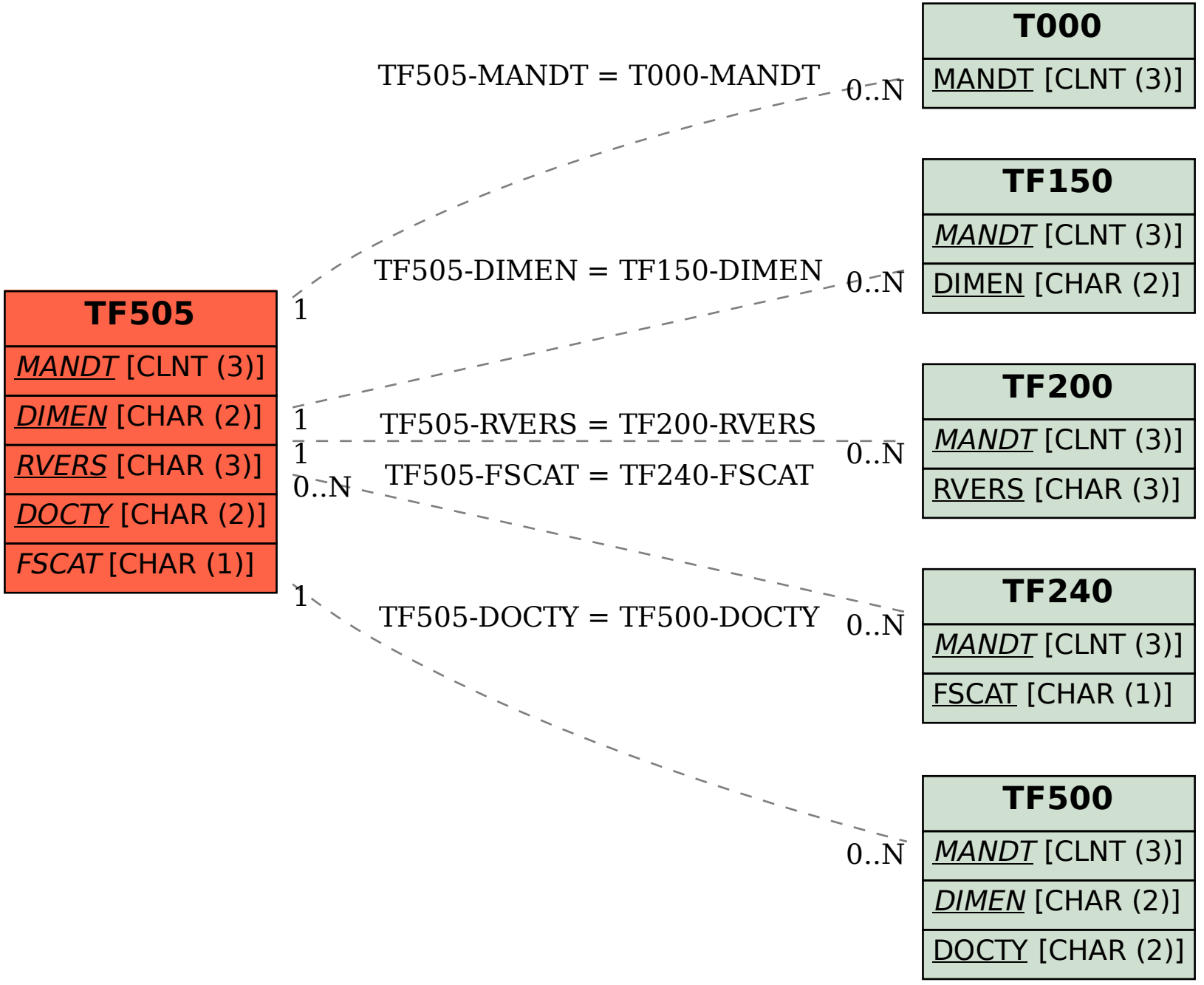SAP ABAP table TF505 {Version-Based Document Type Attributes}