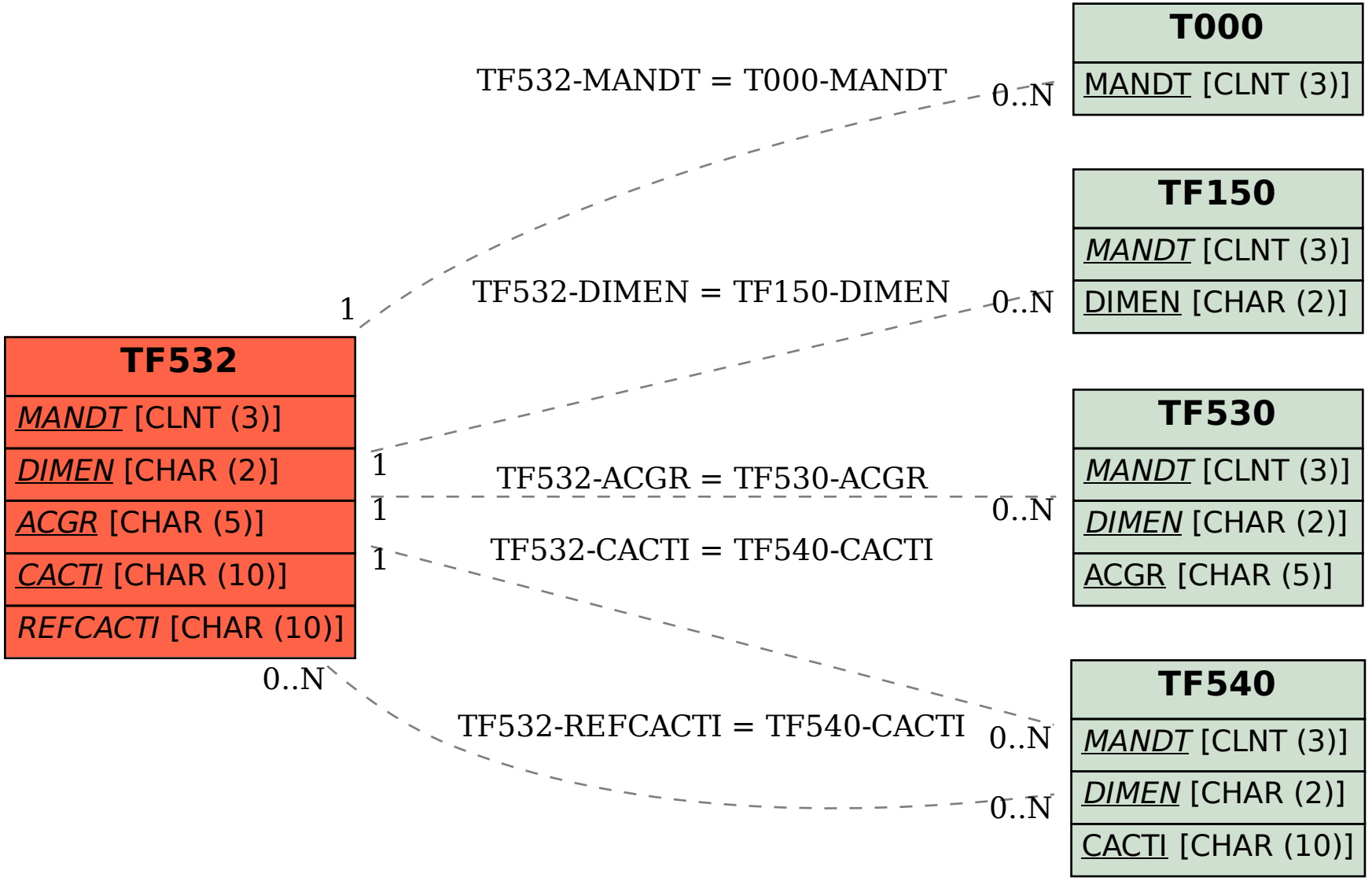# SAP ABAP table TF532 {Task Groups: Task Assignments}