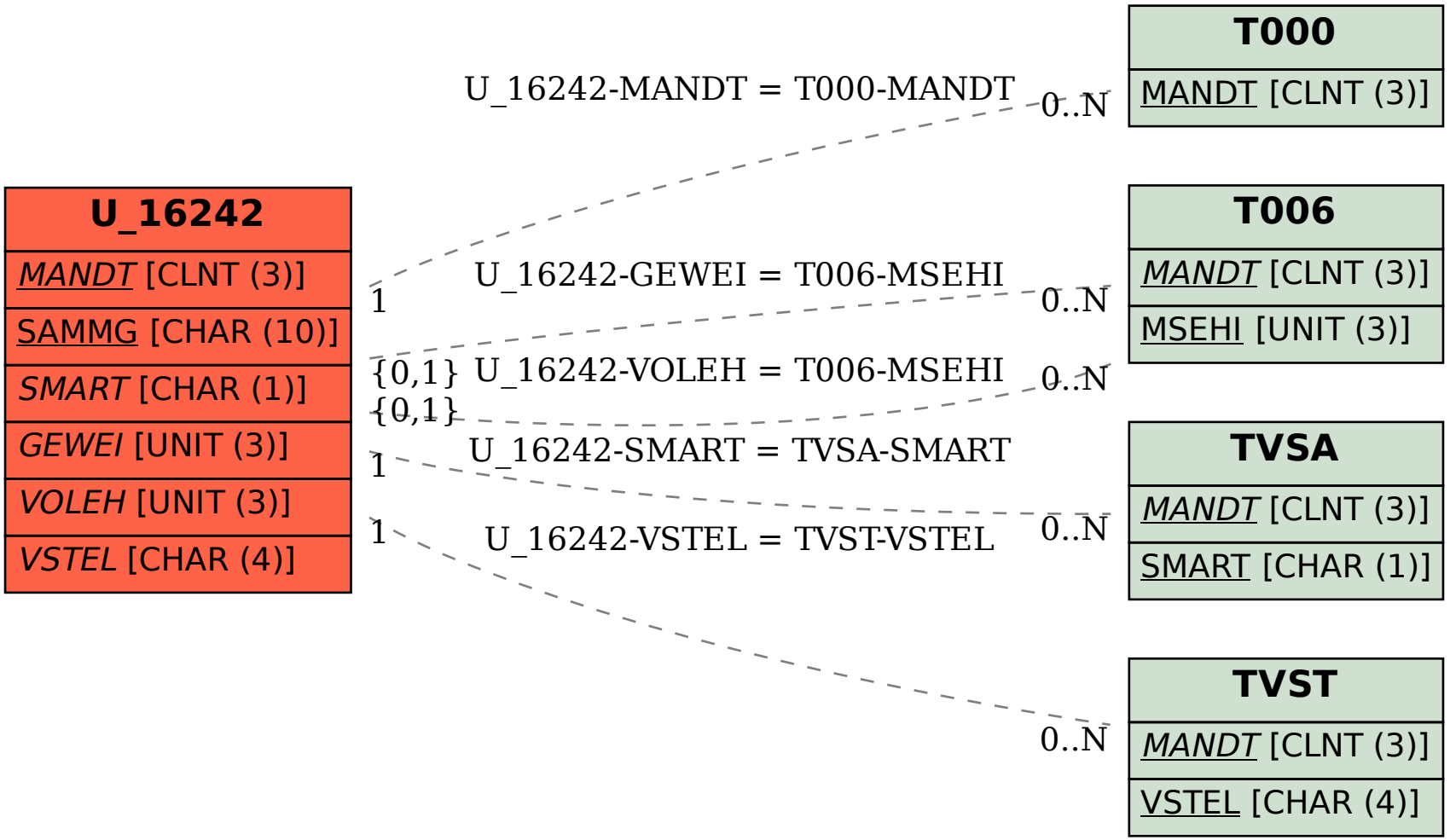SAP ABAP table U_16242 {Generated Table for View}