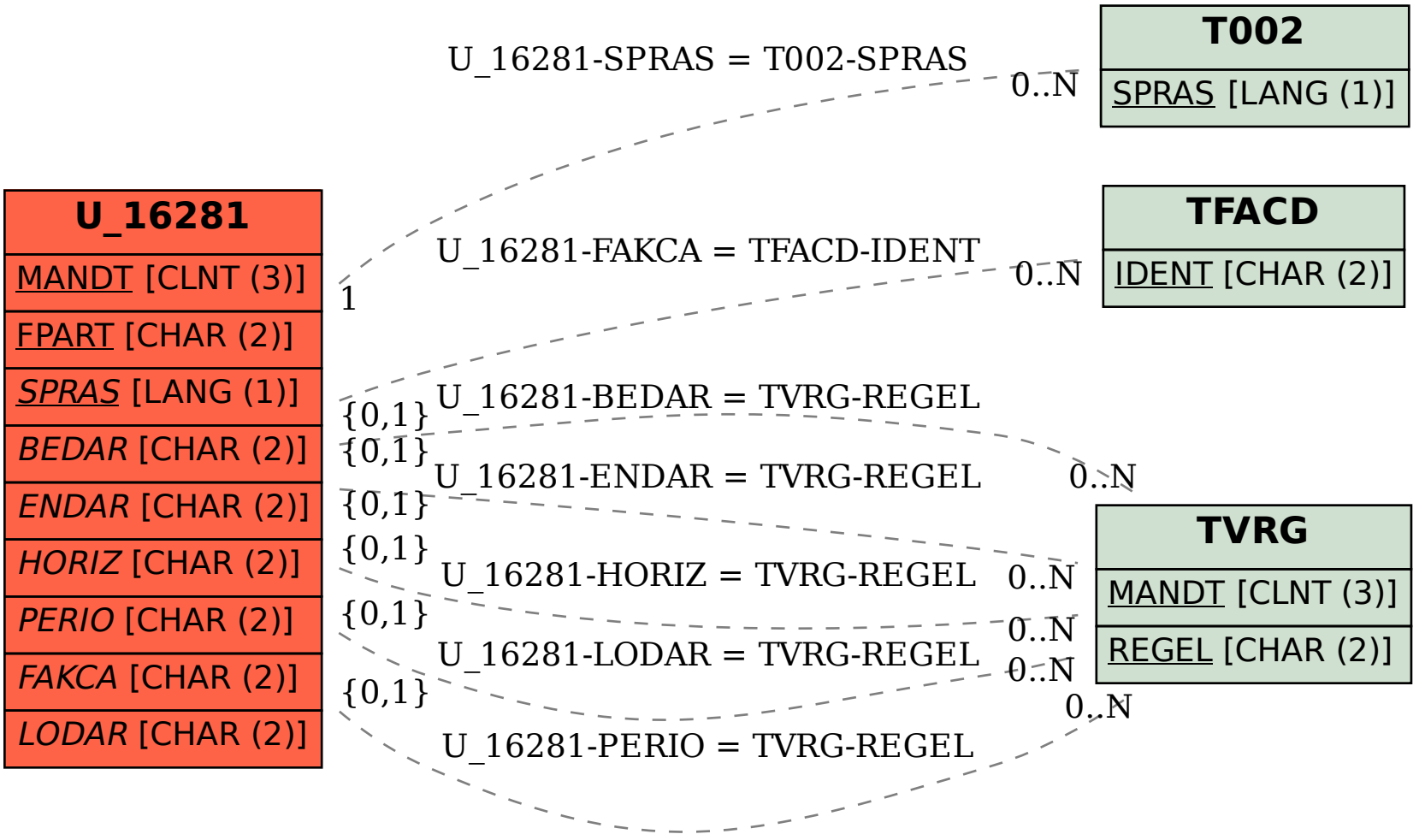SAP ABAP table U_16281 {Generated Table for View}