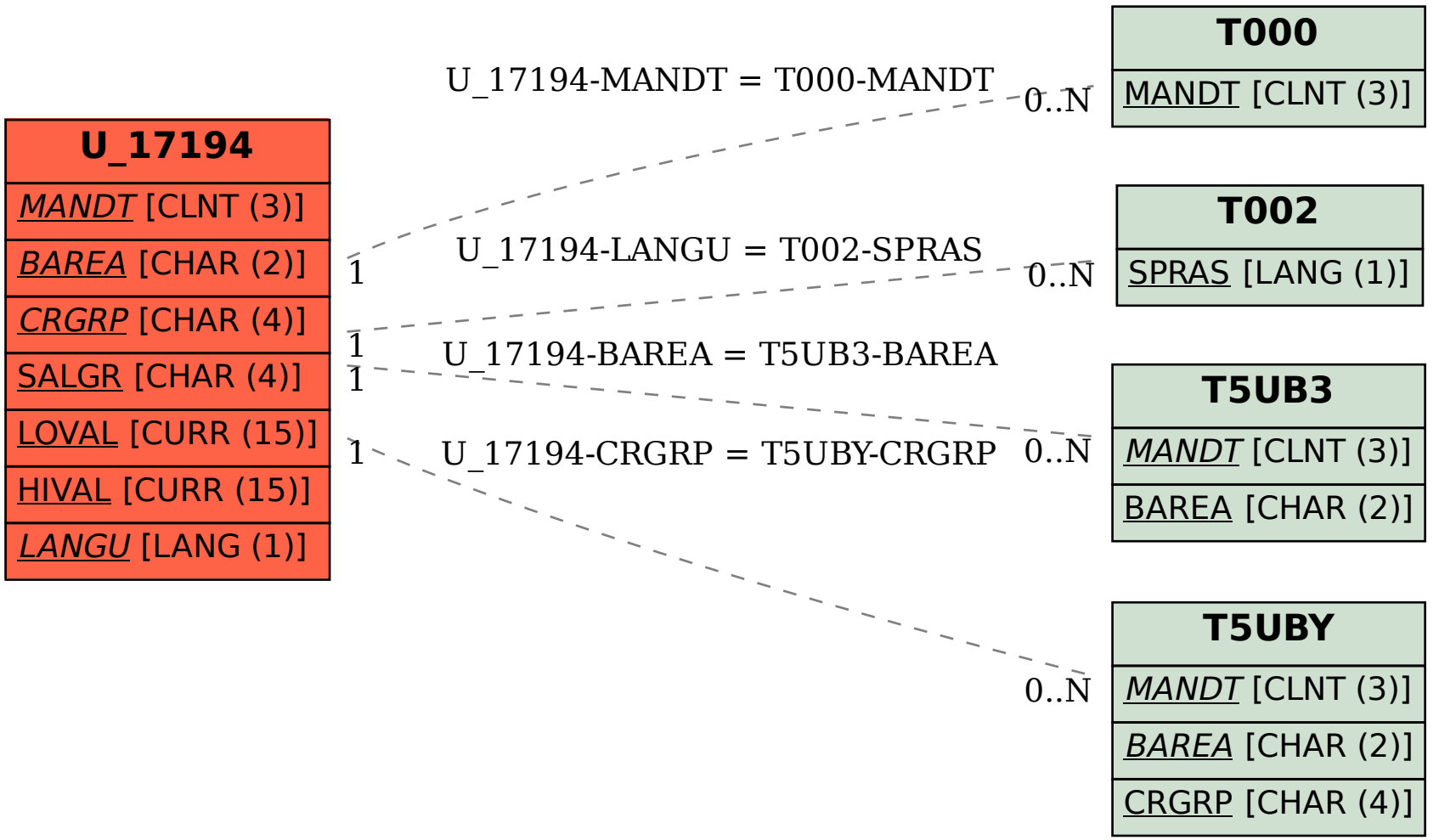SAP ABAP table U_17194 {Generated Table for View U_17194}