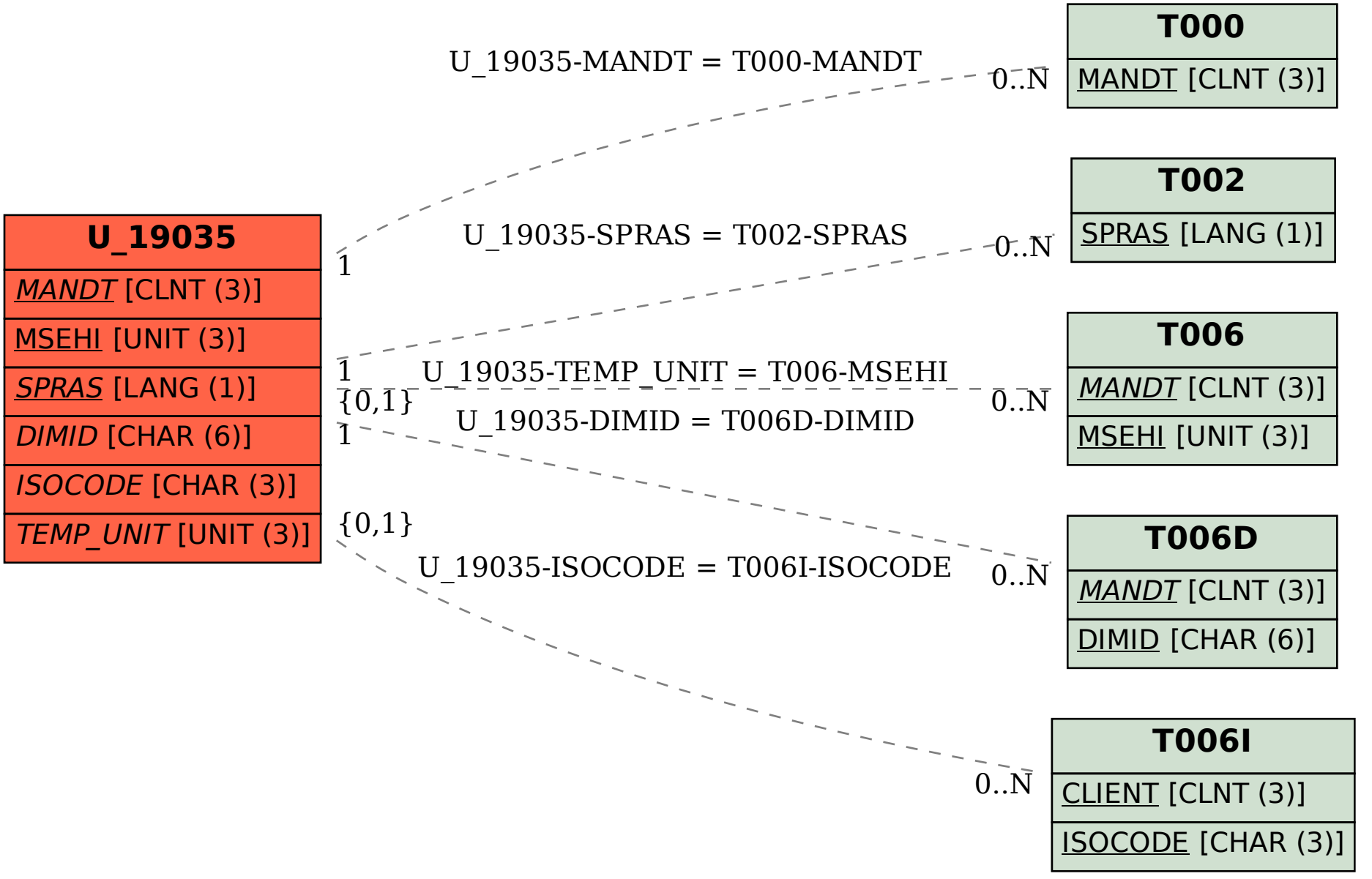SAP ABAP table U_19035 {Generated Table for View}