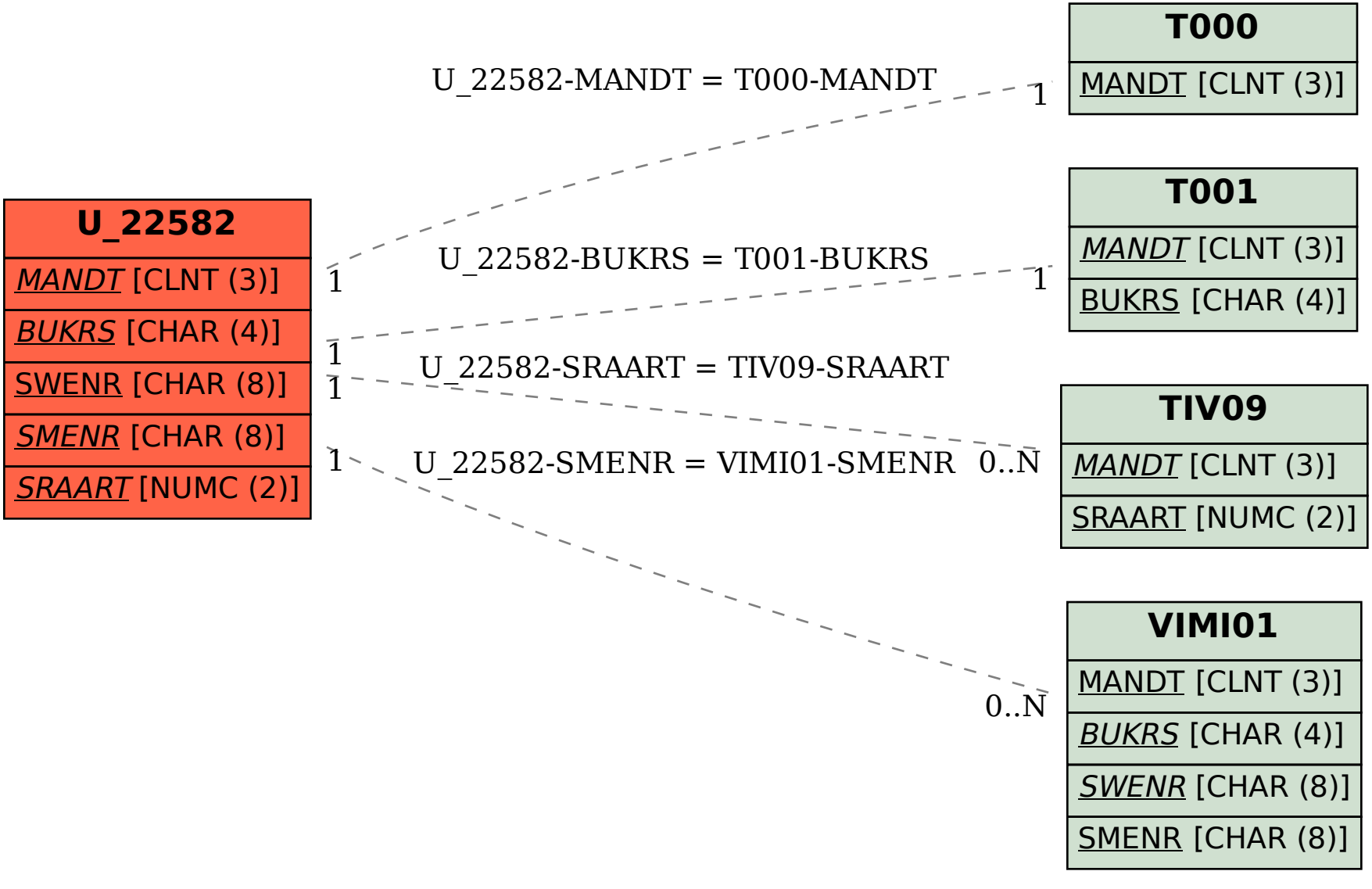SAP ABAP table U_22582 {Generated Table for View U_22582}