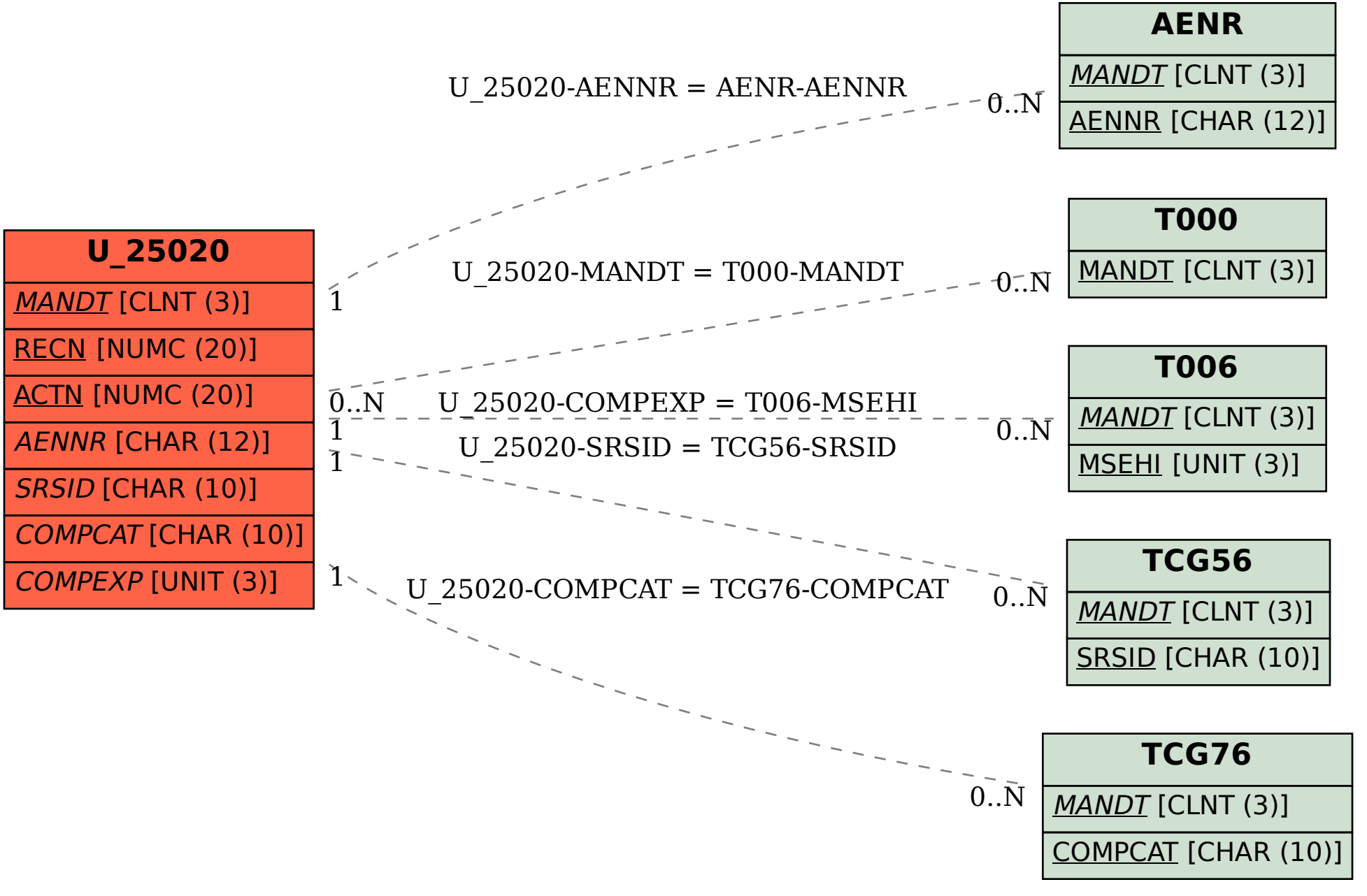SAP ABAP table U_25020 {Generated Table for View}