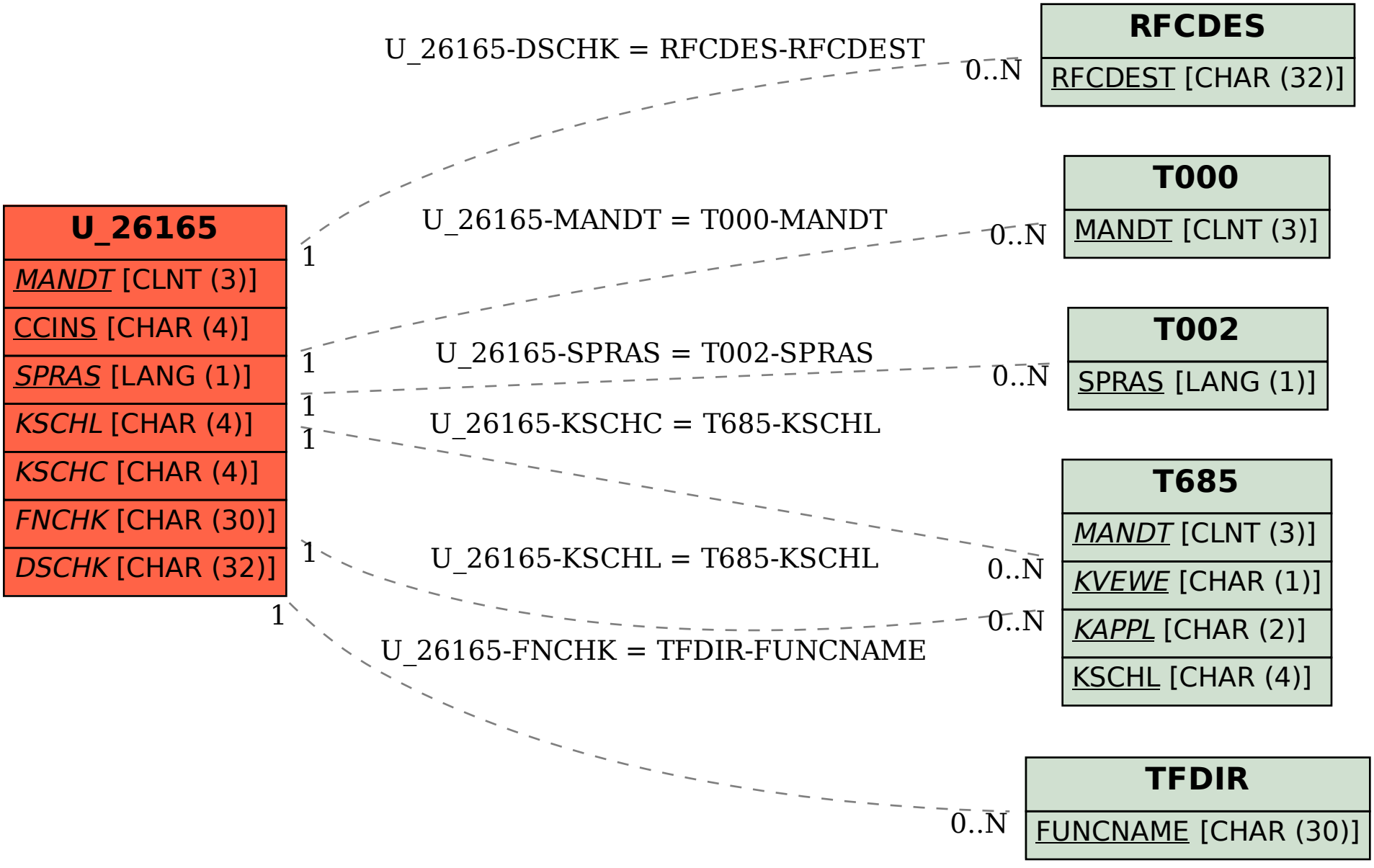SAP ABAP table U_26165 {Generated Table for View}