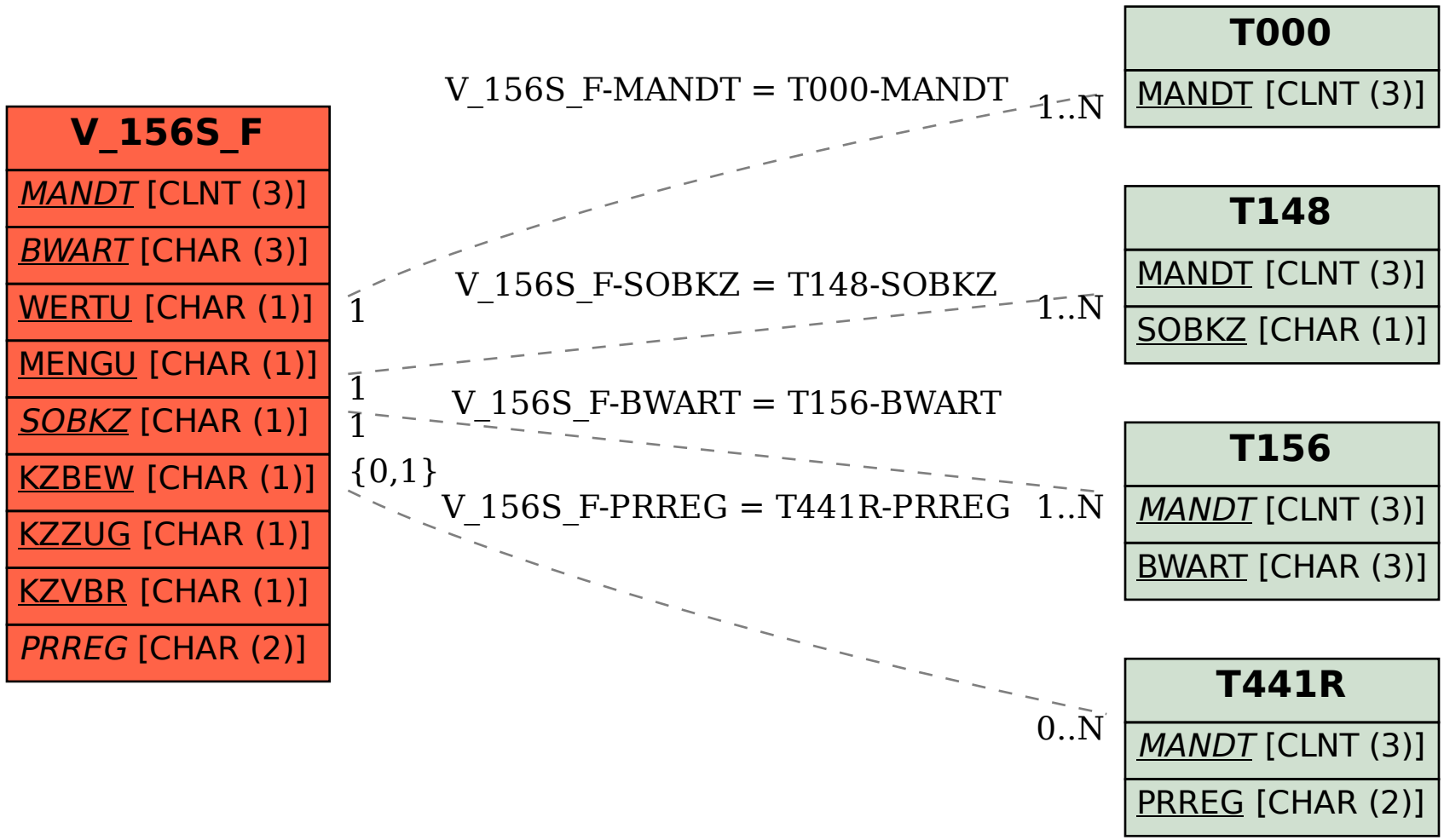SAP ABAP table V_156S_F {Generated Table for View V_156S_F}