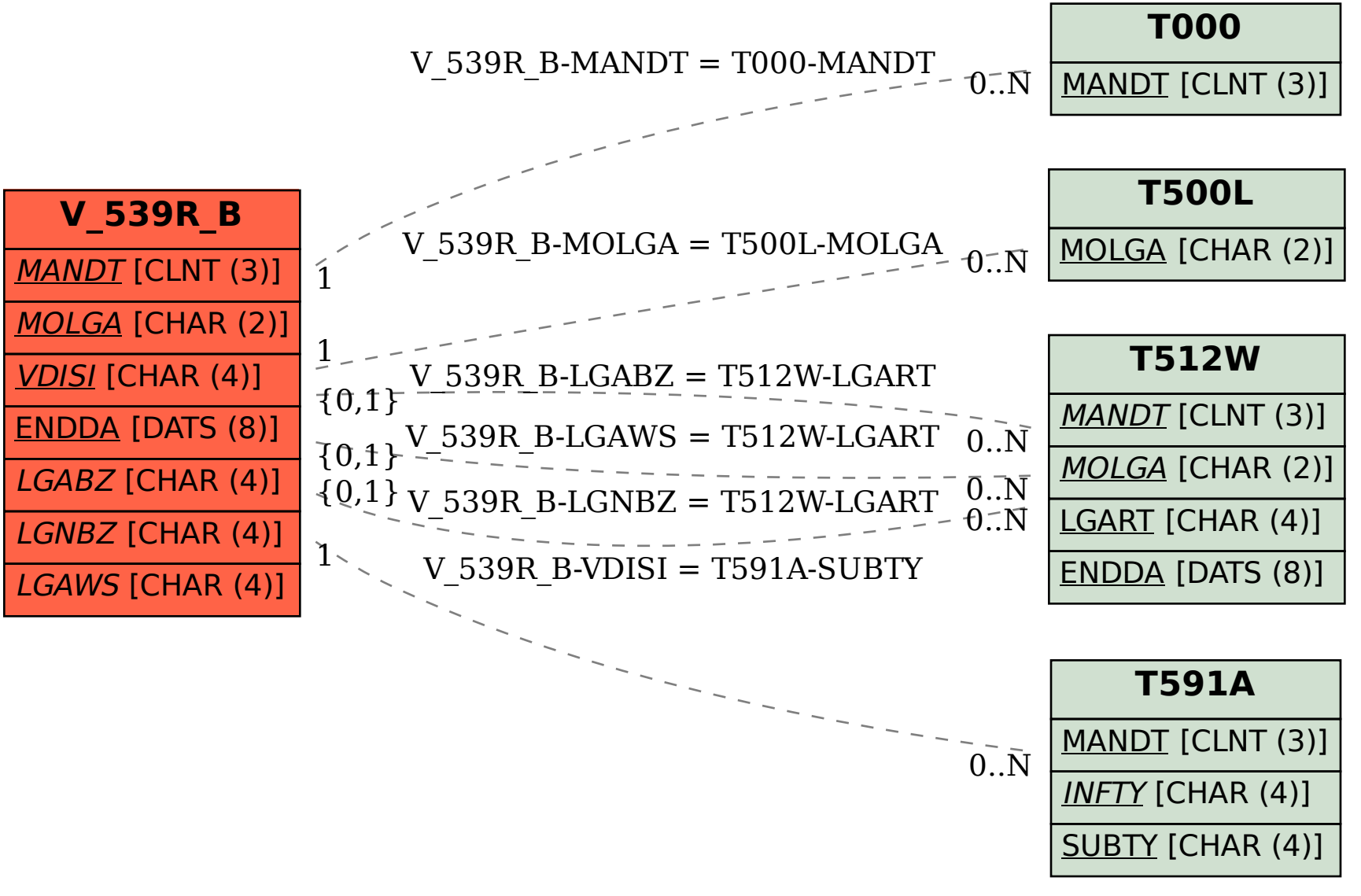SAP ABAP table V_539R_B {Generated Table for View}