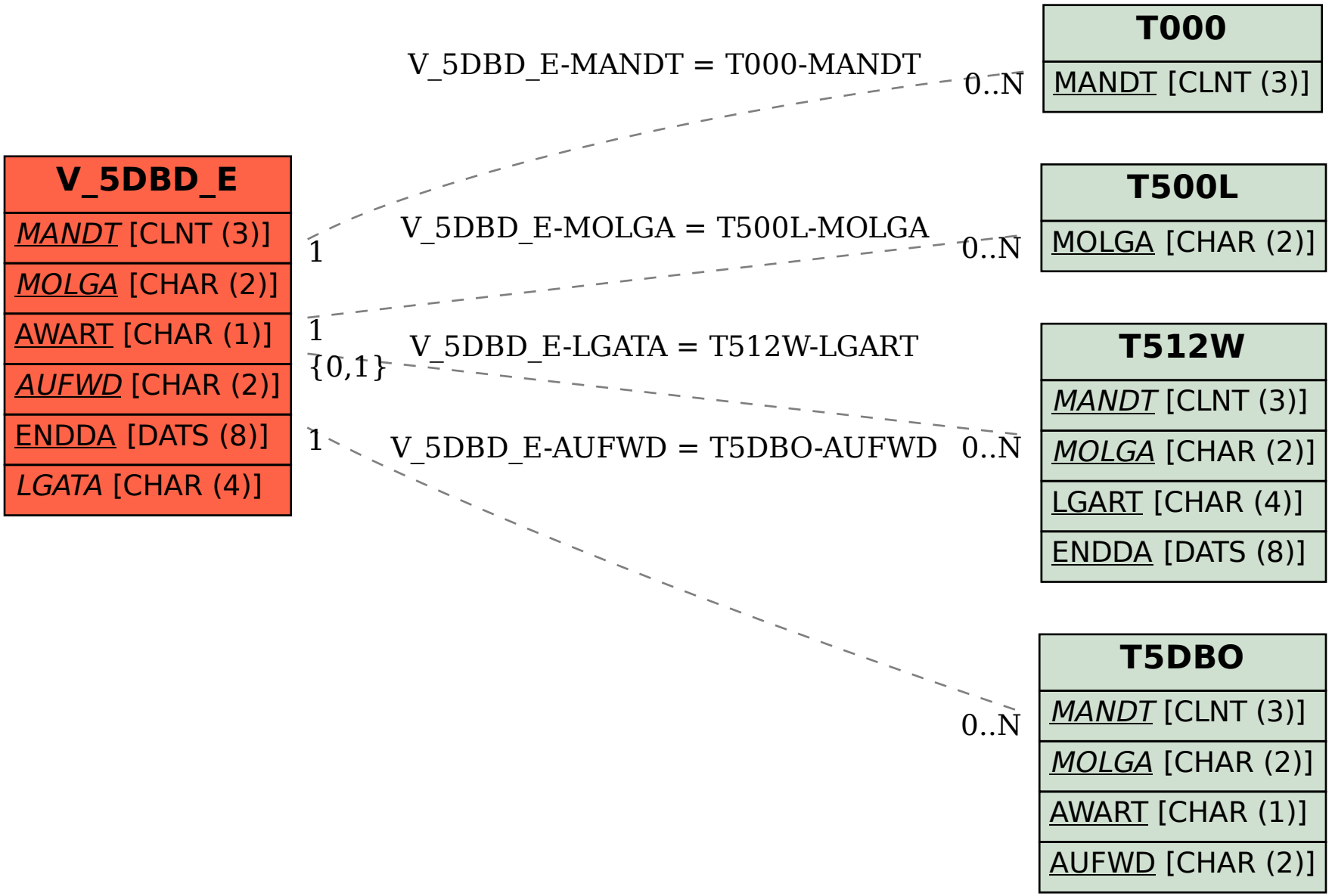SAP ABAP table V_5DBD_E {Generated Table for View}