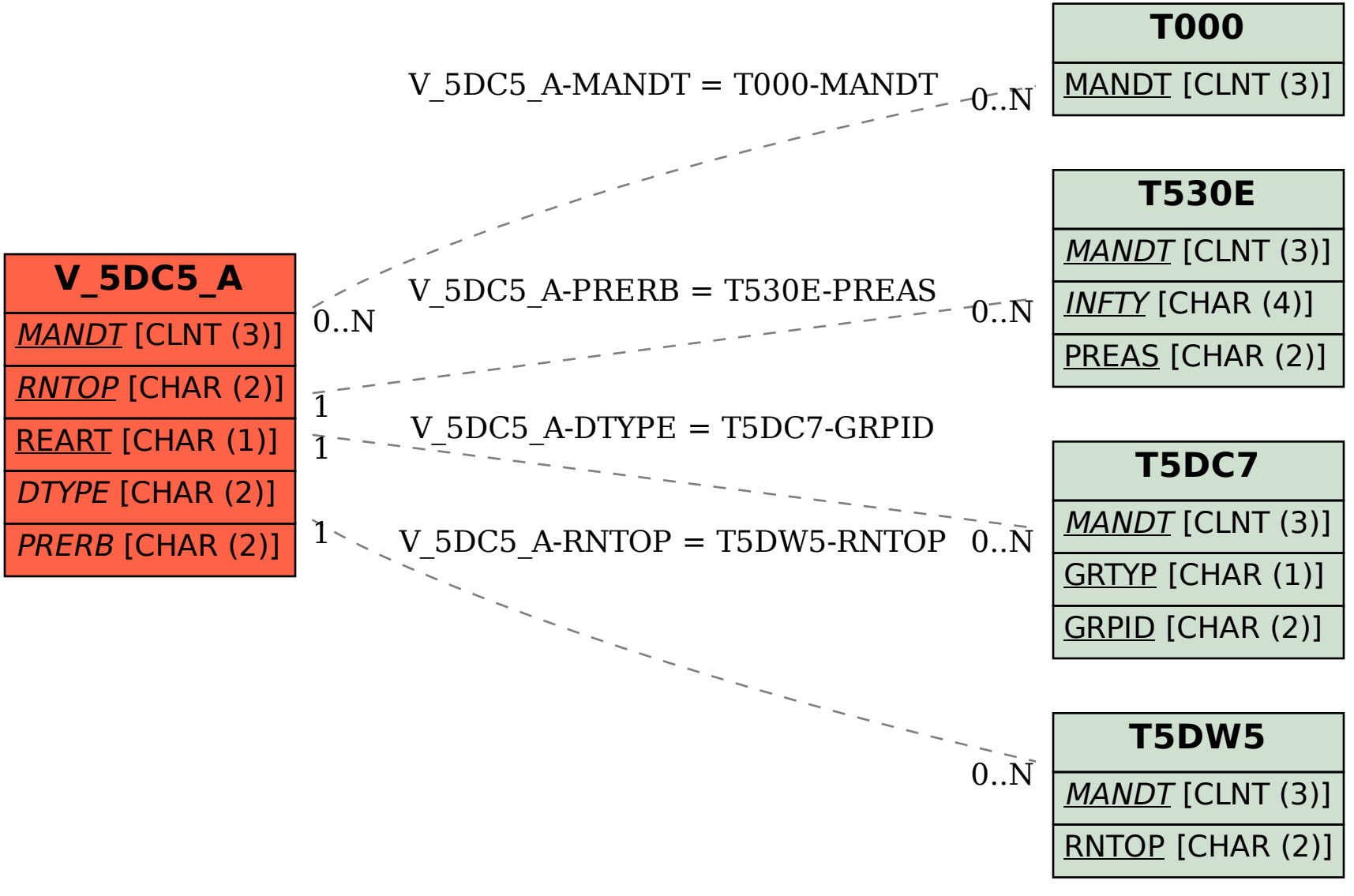SAP ABAP table V_5DC5_A {Generated Table for View}