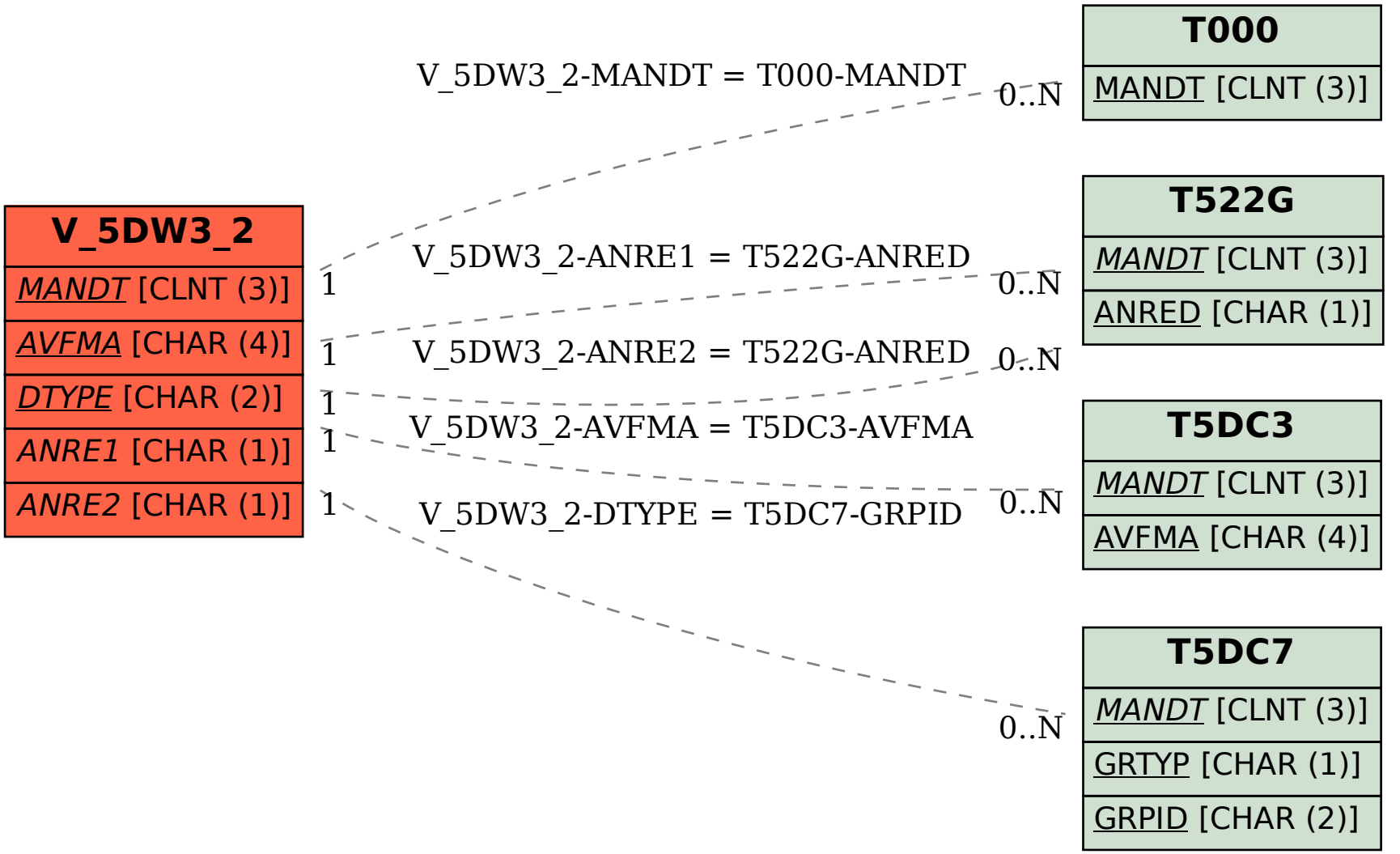# SAP ABAP table V_5DW3_2 {Generated Table for View}