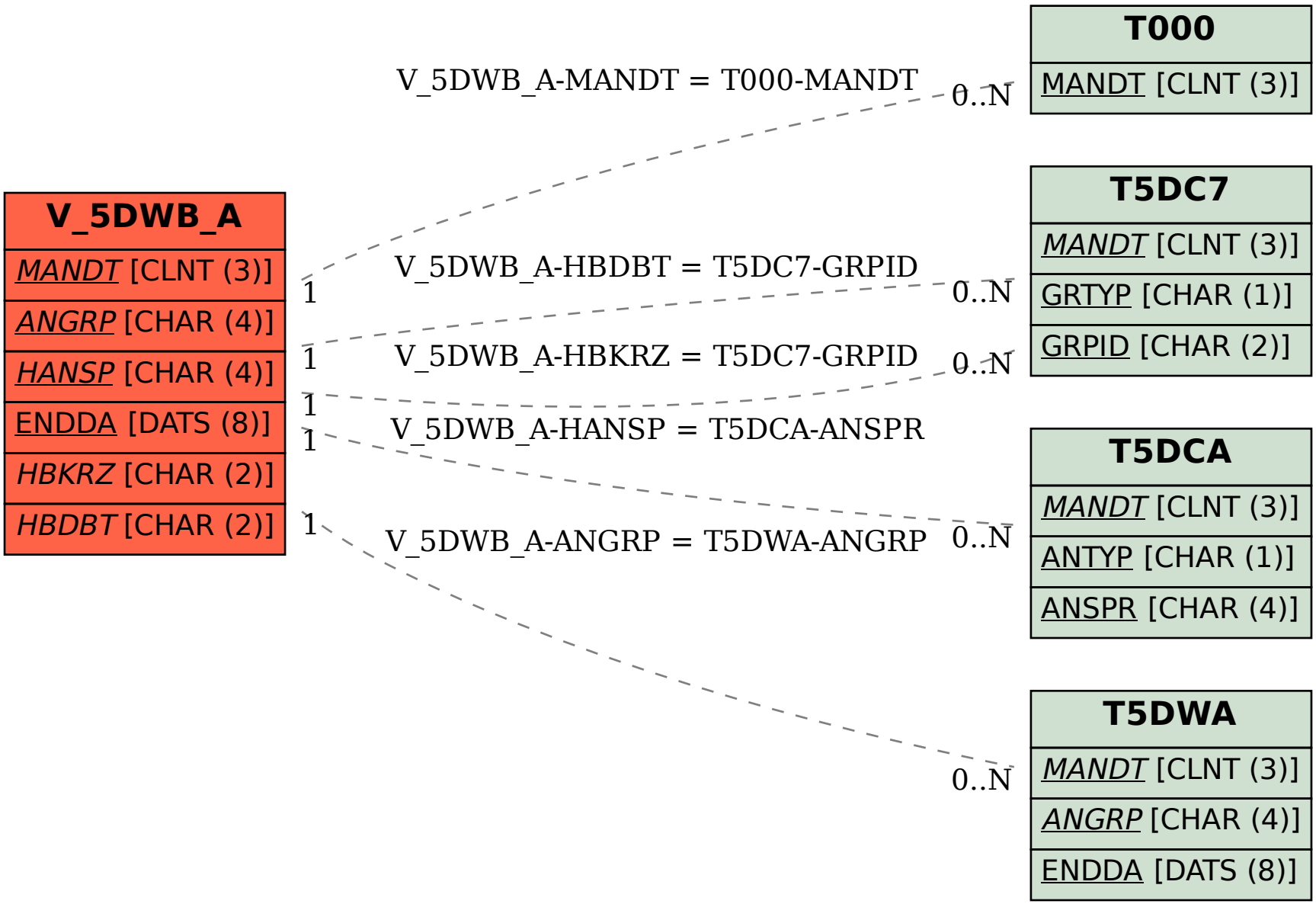SAP ABAP table V_5DWB_A {Generated Table for View}