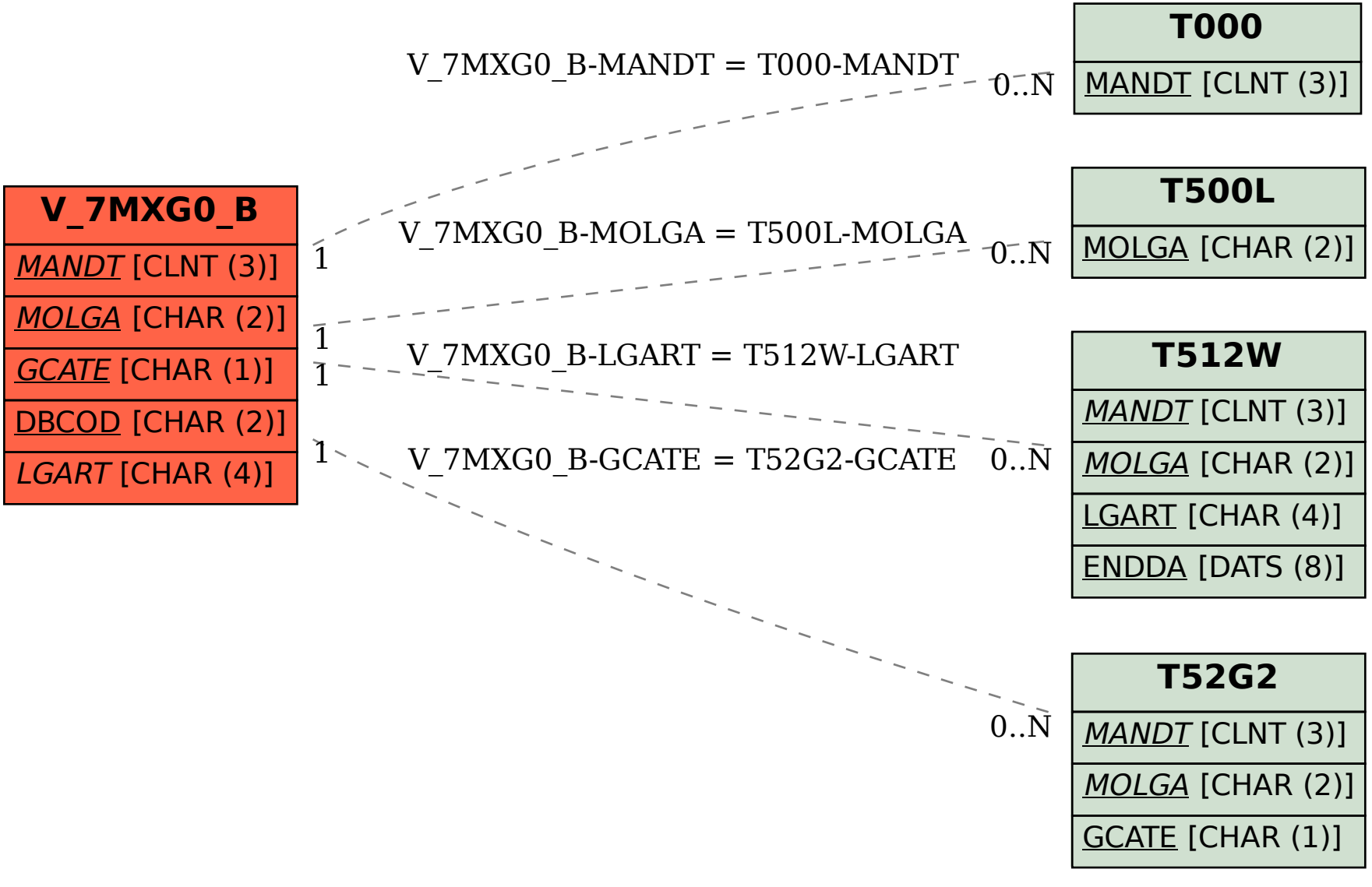SAP ABAP table V_7MXG0_B {Generated Table for View}