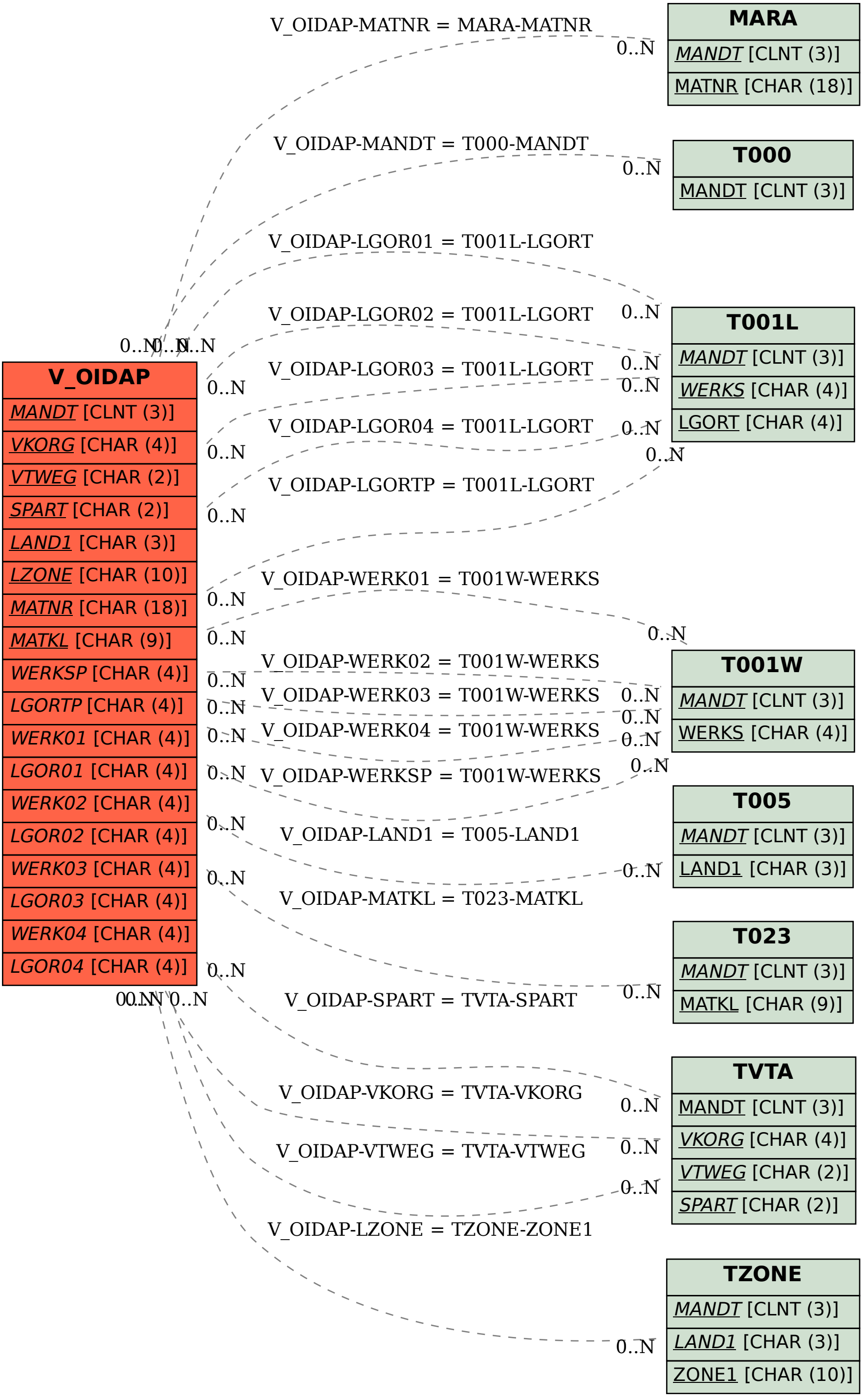SAP ABAP table V_OIDAP {Generated Table for View}